ECOSYS M6026cidn
ECOSYS M6526cidn

SERVICE
MANUAL

Published in March 2014
2PYSM062
Rev.2

CAUTION

RISK OF EXPLOSION IF BATTERY IS REPLACED BY AN INCORRECT TYPE. DISPOSE OF USED BATTERIES ACCORDING TO THE INSTRUCTIONS.

It may be illegal to dispose of this battery into the municipal waste stream. Check with your local solid waste officials for details in your area for proper disposal.

ATTENTION

IL Y A UN RISQUE D’EXPLOSION SI LA BATTERIE EST REMPLACEE PAR UN MODELE DE TYPE INCORRECT. METTRE AU REBUT LES BATTERIES UTILISEES SELON LES INSTRUCTIONS DONNEES.

Il peut être illégal de jeter les batteries dans des eaux d’égout municipales. Vérifiez avec les fonctionnaires municipaux de votre région pour les détails concernant des déchets solides et une mise au rebut appropriée.

Revision history

Revision	Date	Pages	Revised contents
1	26 December 2013	Contents	Added: 1-5-10 (3) and page numbers of contents
		1-3-40 to 45	Correction: U411 and U425
		1-5-52 to 77	Added: Detaching and refitting the image scanner unit
		Address	Correction
2	5 March 2014	Contents	Correction: page numbers of contents
		1-1-2	Correction: Power source → Rated input , 5.0 →4.8A
		1-2-1	Correction: Power supply, 8.9 A→9.0 A, 4.7 A→5.0 A
		1-3-40, 1-3-41 1-3-43 to 45	Correction: Parts number of original
		1-3-46, 1-3-47	Correction: Chenged the procedure
		1-3-81 to 86	Correction: Addition and deletion of the items
		1-4-41 to 45	Correction: Error code
		1-6-1	Added: Safe Update
		1-6-2	Correction: SD card→USB memory
		2-3-13, 2-3-20	Correction: Arrangement and the number of the connector
		2-4-1	Added: Exchange time of a kit
		2-4-2	Added: Comment to (2)Repetitive defects gauge

This page is intentionally left blank.

Safety precautions

This booklet provides safety warnings and precautions for our service personnel to ensure the safety of their customers, their machines as well as themselves during maintenance activities. Service personnel are advised to read this booklet carefully to familiarize themselves with the warnings and precautions described here before engaging in maintenance activities.

Safety warnings and precautions

Various symbols are used to protect our service personnel and customers from physical danger and to prevent damage to their property. These symbols are described below:

⚠**DANGER:** High risk of serious bodily injury or death may result from insufficient attention to or incorrect compliance with warning messages using this symbol.

⚠**WARNING:** Serious bodily injury or death may result from insufficient attention to or incorrect compliance with warning messages using this symbol.

⚠**CAUTION:** Bodily injury or damage to property may result from insufficient attention to or incorrect compliance with warning messages using this symbol.

Symbols

The triangle (△) symbol indicates a warning including danger and caution. The specific point of attention is shown inside the symbol.

 General warning.  Warning of risk of electric shock.

 Warning of high temperature.

⃠ indicates a prohibited action. The specific prohibition is shown inside the symbol.

 General prohibited action.  Disassembly prohibited.

● indicates that action is required. The specific action required is shown inside the symbol.

 General action required.  Remove the power plug from the wall outlet.

 Always ground the copier.

1. Installation Precautions

WARNING

- Do not use a power supply with a voltage other than that specified. Avoid multiple connections to one outlet: they may cause fire or electric shock. When using an extension cable, always check that it is adequate for the rated current. .....
- Connect the ground wire to a suitable grounding point. Not grounding the copier may cause fire or electric shock. Connecting the earth wire to an object not approved for the purpose may cause explosion or electric shock. Never connect the ground cable to any of the following: gas pipes, lightning rods, ground cables for telephone lines and water pipes or faucets not approved by the proper authorities. .....

CAUTION:

- Do not place the copier on an infirm or angled surface: the copier may tip over, causing injury. .....
- Do not install the copier in a humid or dusty place. This may cause fire or electric shock. .....
- Do not install the copier near a radiator, heater, other heat source or near flammable material. This may cause fire. .....
- Allow sufficient space around the copier to allow the ventilation grills to keep the machine as cool as possible. Insufficient ventilation may cause heat buildup and poor copying performance. .....
- Always handle the machine by the correct locations when moving it. .....
- Always use anti-toppling and locking devices on copiers so equipped. Failure to do this may cause the copier to move unexpectedly or topple, leading to injury. .....
- Avoid inhaling toner or developer excessively. Protect the eyes. If toner or developer is accidentally ingested, drink a lot of water to dilute it in the stomach and obtain medical attention immediately. If it gets into the eyes, rinse immediately with copious amounts of water and obtain medical attention. .....
- Advice customers that they must always follow the safety warnings and precautions in the copier's instruction handbook. .....

2. Precautions for Maintenance

WARNING

- Always remove the power plug from the wall outlet before starting machine disassembly. .....
- Always follow the procedures for maintenance described in the service manual and other related brochures. .....
- Under no circumstances attempt to bypass or disable safety features including safety mechanisms and protective circuits. .....
- Always use parts having the correct specifications. .....
- Always use the thermostat or thermal fuse specified in the service manual or other related brochure when replacing them. Using a piece of wire, for example, could lead to fire or other serious accident. .....
- When the service manual or other serious brochure specifies a distance or gap for installation of a part, always use the correct scale and measure carefully. .....
- Always check that the copier is correctly connected to an outlet with a ground connection. .....
- Check that the power cable covering is free of damage. Check that the power plug is dust-free. If it is dirty, clean it to remove the risk of fire or electric shock. .....
- Never attempt to disassemble the optical unit in machines using lasers. Leaking laser light may damage eyesight. .....
- Handle the charger sections with care. They are charged to high potentials and may cause electric shock if handled improperly. .....

CAUTION

- Wear safe clothing. If wearing loose clothing or accessories such as ties, make sure they are safely secured so they will not be caught in rotating sections. .....
- Use utmost caution when working on a powered machine. Keep away from chains and belts. .....
- Handle the fixing section with care to avoid burns as it can be extremely hot. .....
- Check that the fixing unit thermistor, heat and press rollers are clean. Dirt on them can cause abnormally high temperatures. .....

- Do not remove the ozone filter, if any, from the copier except for routine replacement. .....
- Do not pull on the AC power cord or connector wires on high-voltage components when removing them; always hold the plug itself. .....
- Do not route the power cable where it may be stood on or trapped. If necessary, protect it with a cable cover or other appropriate item. .....
- Treat the ends of the wire carefully when installing a new charger wire to avoid electric leaks. .....
- Remove toner completely from electronic components. .....
- Run wire harnesses carefully so that wires will not be trapped or damaged. .....
- After maintenance, always check that all the parts, screws, connectors and wires that were removed, have been refitted correctly. Special attention should be paid to any forgotten connector, trapped wire and missing screws. .....
- Check that all the caution labels that should be present on the machine according to the instruction handbook are clean and not peeling. Replace with new ones if necessary. .....
- Handle greases and solvents with care by following the instructions below: .....
  · Use only a small amount of solvent at a time, being careful not to spill. Wipe spills off completely.
  · Ventilate the room well while using grease or solvents.
  · Allow applied solvents to evaporate completely before refitting the covers or turning the power switch on.
  · Always wash hands afterwards.
- Never dispose of toner or toner bottles in fire. Toner may cause sparks when exposed directly to fire in a furnace, etc. .....
- Should smoke be seen coming from the copier, remove the power plug from the wall outlet immediately. .....

3. Miscellaneous

WARNING

- Never attempt to heat the drum or expose it to any organic solvents such as alcohol, other than the specified refiner; it may generate toxic gas. .....
- Keep the machine away from flammable liquids, gases, and aerosols. A fire or an electric shock might occur. .....

This page is intentionally left blank.

CONTENTS

1-5 Assembly and disassembly

1-6 Requirements on PWB Replacement

2-1 Mechanical Construction

2-2 Electrical Parts Layout

2-3 Operation of the PWBs

2-4 Appendixes

INSTALLATION GUIDE

1-1-1 Specifications

Machine

Item		Specifications	
		3 in 1 model (without FAX)	4 in 1 model (with FAX)
Type		Desktop	
Printing method		Electrophotography by semiconductor laser, tandem (4) drum system	
Originals		Sheet, Book, 3-dimensional objects (maximum original size: Folio/Legal)	
Original feed system		Fixed	
Paper weight	Cassette	60 to 163 g/m² (Duplex: 60 to 163 g/m²)	
	MP tray	60 to 220 g/m², 230 µm (Cardstock)	
Paper type	Cassette	Plain, Recycled, Preprinted, Bond, Color (Colour), Prepunched, Letterhead, Thick, High quality, Custom 1 to 8	
	MP tray	Plain, Transparency, Vellum, Labels, Recycled, Preprinted, Bond, Cardstock, Color (Colour), Prepunched, Letterhead, Thick, Envelope, Coated, High quality, Custom 1 to 8	
Paper size	Cassette	A4, A5, A6, B5, Letter, Legal, Statement, Executive, Oficio II, Folio, 16K, C5, Custom	
	MP tray	A4, A5, A6, B5, ISO B5, B6, Letter, Legal, Statement, Executive, Oficio II, Folio, 16K, Envelope #10, Envelope #9, Envelope #6, Envelope Monarch, Envelope DL, Envelope C5, Postcards, Return postcard, Youkei 2, Youkei 4, Custom, 216×340mm	
Zoom level		Manual mode : 25 to 400%, 1% increments Auto mode : 400%, 200%, 141%, 129%, 115%, 90%, 86%, 78%, 70%, 64%, 50%, 25%	
Copy speed	Simplex	A4 :26 sheets/min Letter : 28 sheets/min Legal : 23 sheets/min A5/B5/A6: 28 sheets/min (Up to 15 images) A5/B5/A6: 14 sheets/min (16 images or subsequent ones)	
First copy time (A4, feed from cassette)	B/W	When using the DP : 11.0 s or less When the DP is not used: 10.0 s or less	
	Color	When using the DP : 13.0 s or less When the DP is not used: 12.0 s or less	
Warm-up time (22 °C/71.6 °F, 60% RH)		Power on : 29 s or less Low power mode :11 s or less Sleep mode: 17 s or less	
Paper capacity	Cassette	250 sheets (80g/m²)	
	MP tray	50 sheets (80 g/m², plain paper, A4/Letter or less)	
Output tray capacity		150 sheets (80g/m²)	
Continuous copying		1 to 999 sheets	
Light source		LED	

Item		Specifications	
		3 in 1 model (without FAX)	4 in 1 model (with FAX)
Scanning system		Flat bed scanning by CCD image sensor	
Photoconductor		OPC drum (diameter 30 mm)	
Image write system		Semiconductor laser	
Charging system		Charger roller	
Developing system		Touch down developing system Developer: 2-component Toner replenishing: Automatic from the toner container	
Transfer system		Primary: Transfer belt Secondary: Transfer roller	
Separation system		Small diameter separation	
Cleaning system		Drum: Counter blade	
Charge erasing system		Exposure by cleaning lamp (LED)	
Fusing system		Heat and pressure fusing with the heat roller and the press roller Heat source: halogen heater Abnormally high temperature protection devices: thermostat	
CPU		PowerPC465S (667MHz)	
Main memory	Standard	1024MB	
	Maximum	2048MB	
Interface	Standard	USB interface connector: 1 (USB Hi-speed) USB host: 2 Network interface: 1 (10BASE-T/100BASE-TX/1000BASE-T)	
	Option	eKUIO slot: 1	
Resolution		600 × 600 dpi	
Operating environment	Temperature	10 to 32.5 °C/50 to 90.5 °F	
	Humidity	15 to 80% RH	
	Altitude	2,500 m/8,202 ft or less	
	Brightness	1,500 lux or less	
Dimensions (W × D × H)		514 × 550 × 603 mm 20 1/4 × 21 5/8 × 23 3/4”	
Weight		38.6 kg / 85.1 lb (with toner container)	38.7 kg / 85.3 lb (with toner container)
Space required (W × D)		514 × 750 mm (using MP tray) 20 1/4 × 29 1/2” (using MP tray)	
Rated input		120 V AC, 60 Hz, more than 9.0 A 220 - 240 V AC, 50/60 Hz, more than 4.8 A	
Options		Paper feeder × 2, Expanded memory, Card authentication kit, Card reader holder, Network interface kit, USB keyboard, SSD	

Document processor

Item	Specifications
Original feed method	Automatic feed
Supported original types	Sheet originals
Original sizes	Maximum: A4/Legal Minimum : A5/Statement
Original weights	Simplex: 50 to 120 g/m^2 Duplex : 50 to 110 g/m^2
Loading capacity	50 sheets (50 to 80 g/m^2) or less
Dimensions (W × D × H)	490 × 338 × 104 mm 19 5/16 × 13 5/16 × 4 1/8”
Weight	3 kg/ 6.6 lb or less

Printer

Item		Specifications
Printing speed	**Simplex**	A4 : 26 sheets/min Letter : 28 sheets/min Legal : 23 sheets/min A5/B5/A6: 28 sheets/min (Up to 15 images) A5/B5/A6: 14 sheets/min (16 images or subsequent ones)
	Duplex	A4 : 13 sheets/min Letter : 13 sheets/min Legal : 12 sheets/min A5/B5 : 14 sheets/min
First print time (A4, feed from cassette)		B/W : 9.0 s or less Color: 10.0 s or less (Excluding time for system stabilization immediately after turning on the main power.)
Resolution		600 dpi
Operating system		Windows 2000, Windows XP, Windows XP Professional, Windows Server 2003, Windows Server 2003 x64 Edition, Windows Vista x86 Edition, Windows Vista x64 Edition, Windows 7 x86 Edition, Windows 7 x64 Edition, Windows 8 x86 Edition, Windows 8 x64 Edition, Windows Server 2008, Windows Server 2008 x64 Edition, Windows Server 2012 x64 Edition Apple Macintosh OS 9.x, Apple Macintosh OS X (Ver.10.5 or more)
Interface		USB interface connector: 1 (USB Hi-speed) USB host: 2 Network interface: 1 (10BASE-T/100BASE-TX/1000BASE-T)
Page description language		PRESCRIBE

Scanner

Item		Specifications
Operating system		Windows XP (32bit/64bit), Windows Vista (32bit/64bit), Windows 7 (32bit/64bit), Windows 8 (32bit/64bit), Windows Server 2003 (32bit/64bit), Windows Server 2008 (32bit/64bit), Windows Server 2008 R2, Windows Server 2012
System requirements		IBM PC/AT compatible CPU: Celeron 600 MHz or higher RAM: 128 MB or more HDD free space: 20 MB or more Interface: Ethernet
Resolution		600 dpi, 400 dpi, 300 dpi, 200 dpi, 200×400 dpi, 200×100 dpi
File format		JPEG, TIFF, PDF, XPS, PDF/A, High compression PDF
Scanning speed	**Simplex**	B/W : 35 images/min Color: 25 images/min (A4 landscape, 300 dpi, Image quality: Text/Photo original)
	Duplex	B/W : 21 images/min Color: 15 images/min (A4 landscape, 300 dpi, Image quality: Text/Photo original)
Interface		Network interface: 1 (10BASE-T/100BASE-TX/1000BASE-T)
Network protocol		TCP/IP
Transmission system		PC transmission SMB Scan to SMB FTP Scan to FTP, FTP over SSL E-mail transmission SNTP Scan to E-mail TWAIN scan*1 WIA scan*2

*1 Available operating system: Windows XP, Windows Vista, Windows Server 2008, Windows 7, Windows Server 2012, Windows 8

*2 Available operating system: Windows Vista, Windows Server 2008, Windows 7, Windows Server 2012 Windows 8

FAX (4 in 1 model (with FAX) only)

Item	Specifications
Compatibility	G3
Communication line	Subscriber telephone line
Transmission time	3 s or less (33600 bps, JBIG, ITU-T A4 #1 chart)
Transmission speed	33600/31200/28800/26400/24000/21600/19200/16800/14400/12000/9600/7200/4800/2400 bps
Coding scheme	JBIG/MMR/MR/MH
Error correction	ECM
Original size	Max. width: 8 1/2"/216 mm Max. length: 14"/356 mm
Automatic document feed	Max. 50 sheets
Scanner resolution	Horizontal × Vertical 200 × 100 dpi Normal (8 dot/mm × 3.85 line/mm) 200 × 200 dpi Fine (8 dot/mm × 7.7 line/mm) 200 × 400 dpi Super fine (8 dot/mm × 15.4 line/mm) 400 × 400 dpi Ultra fine (16 dot/mm × 15.4 line/mm)
Printing resolution	600 × 600 dpi
Gradations	256 shades (Error diffusion)
One-Touch key	100 keys
Multi-Station transmission	Max. 100 destinations
Substitute memory reception	256 sheets or more (when using ITU-T A4 #1 chart)
Image memory capacity	3.5 MB (standard) (for incoming faxed originals)
Report output	Sent result report, FAX RX result report, Report for job canceled before sending, Activity report, Status page

NOTE: These specifications are subject to change without notice.

1-1-2 Parts names

(1) Machine (front side)

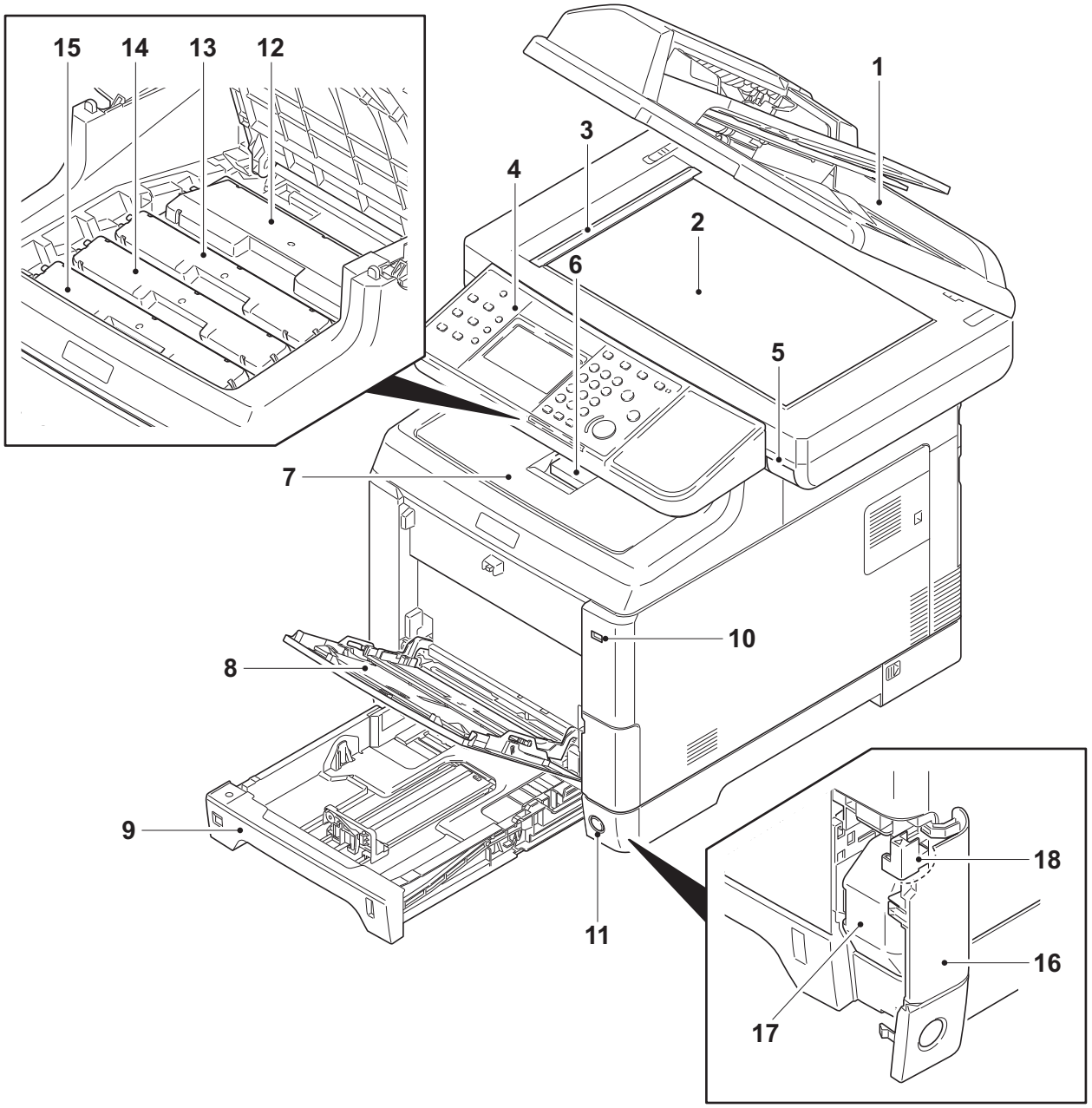

Figure 1-1-1

1. Document processor (DP)
2. Contact glass
3. Original size Indicator plate
4. Operation panel
5. Inner tray lever
6. Paper stopper
7. Inner tray
8. MP (Multi-Purpose) tray
9. Cassette
10. USB memory slot
11. Main power switch
12. Toner container K
13. Toner container M
14. Toner container C
15. Toner container Y
16. Waste toner cover
17. Waste toner box
18. Lock release button

(2) Machine (rear side)

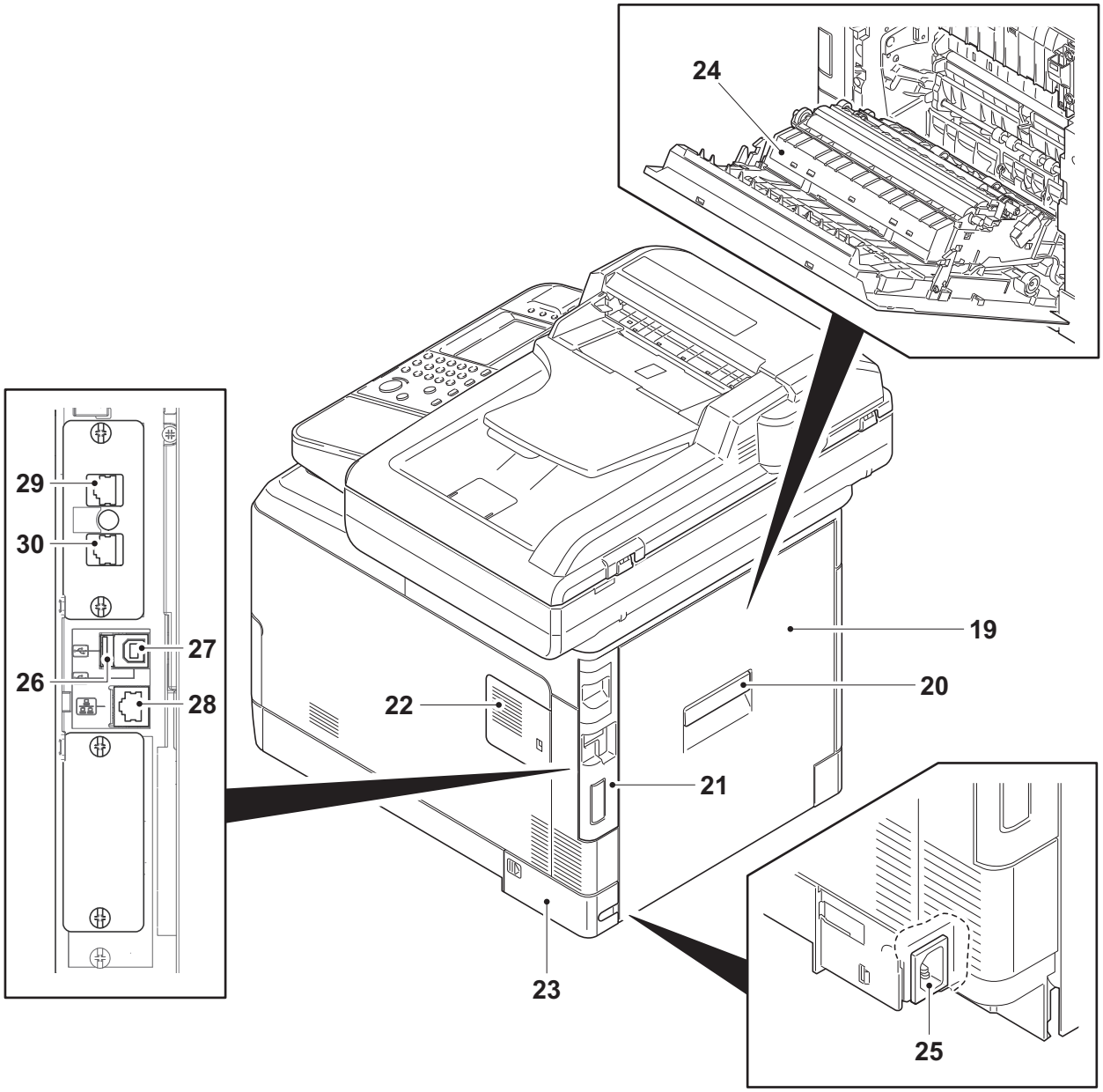

Figure 1-1-2

19. Rear cover
20. Rear cover lever
21. IF cover
22. Memory cover
23. Power cord cover
24. Paper conveying unit
25. Power cord connector
26. USB memory slot
27. USB interface connector
28. Network interface connector
29. LINE connector*
30. TEL connector*

*: 4 in 1 model (with FAX) only

(3) Document processor

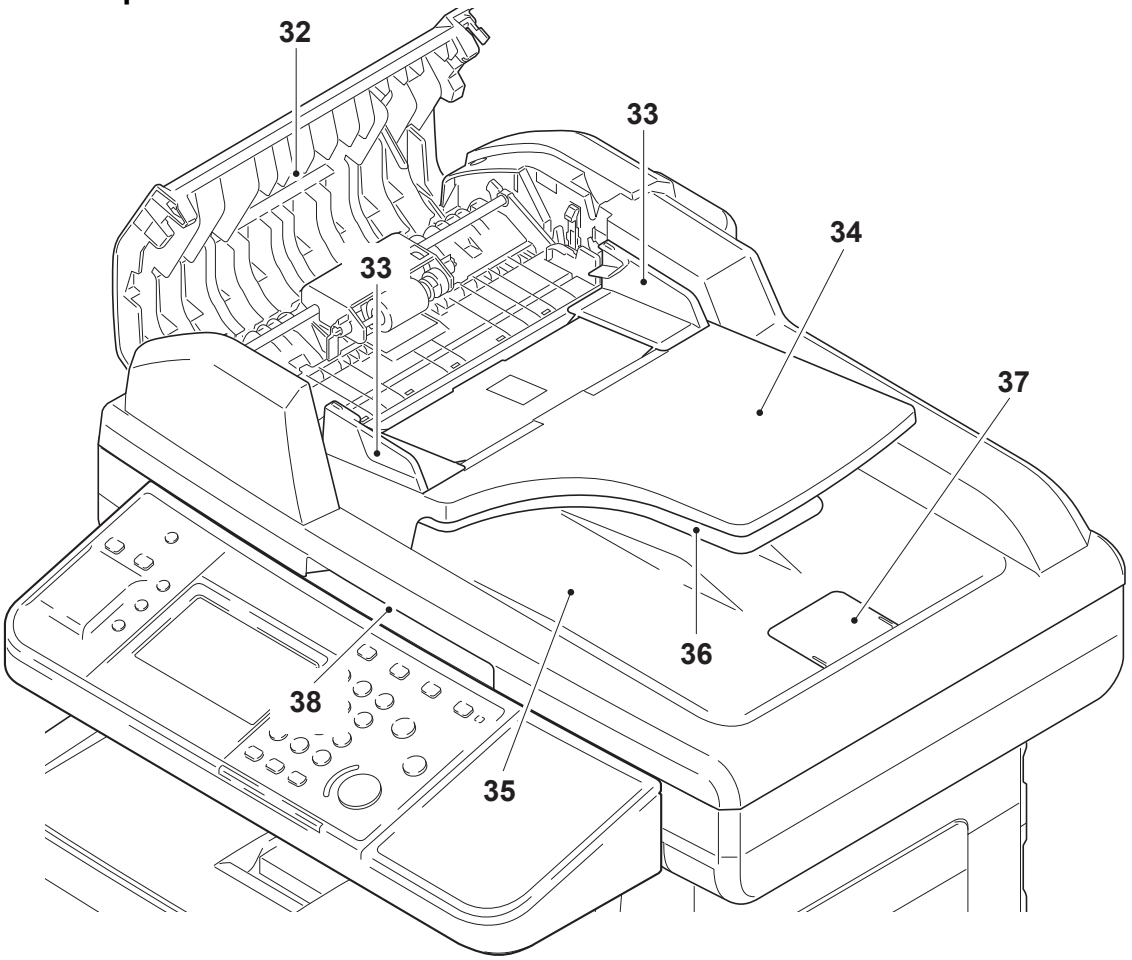

Figure 1-1-3

31. DP top cover
32. Original width guides
33. Original table
34. Original eject table
35. Switchback table
36. Original stopper
37. Opening Handle

(4) Operation panel

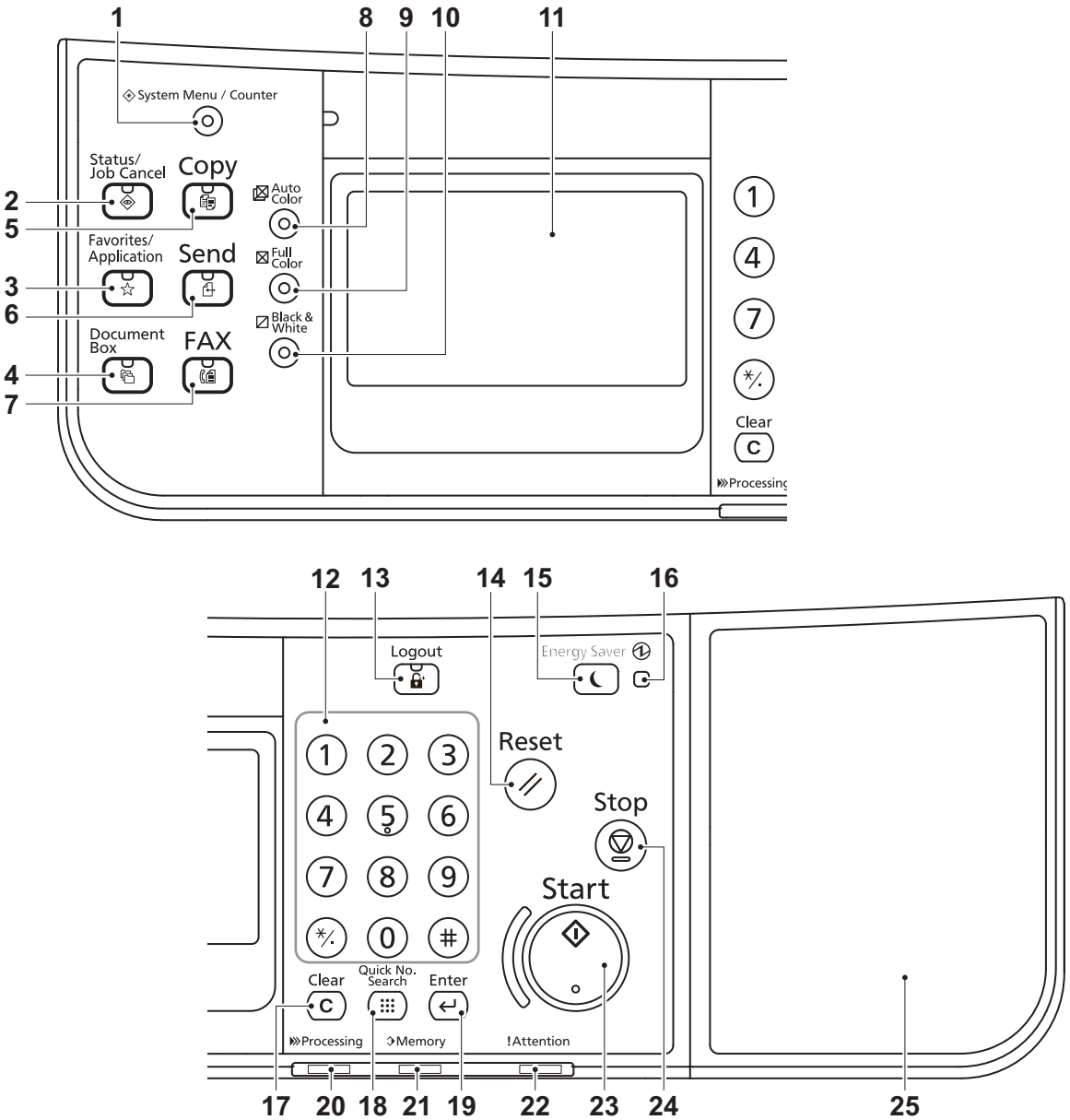

Figure 1-1-4

1. System menu/Counter key
2. Status/Job cancel key
3. Favorites/application key
4. Document box key
5. Copy key
6. Send key
7. FAX key*
8. Auto color key
9. Full color key
10. Black and White key
11. Message display
12. Numeric keys
13. Logout key
14. Reset key
15. Energy saver key
16. Main power LED
17. Clear key
18. Quick No.Search key
19. Enter key
20. Processing indicator
21. Memory indicator
22. Attention indicator
23. Start key
24. Stop key
25. IC Card reader box

*: 4 in 1 model (with FAX) only

1-1-3 Machine cross section

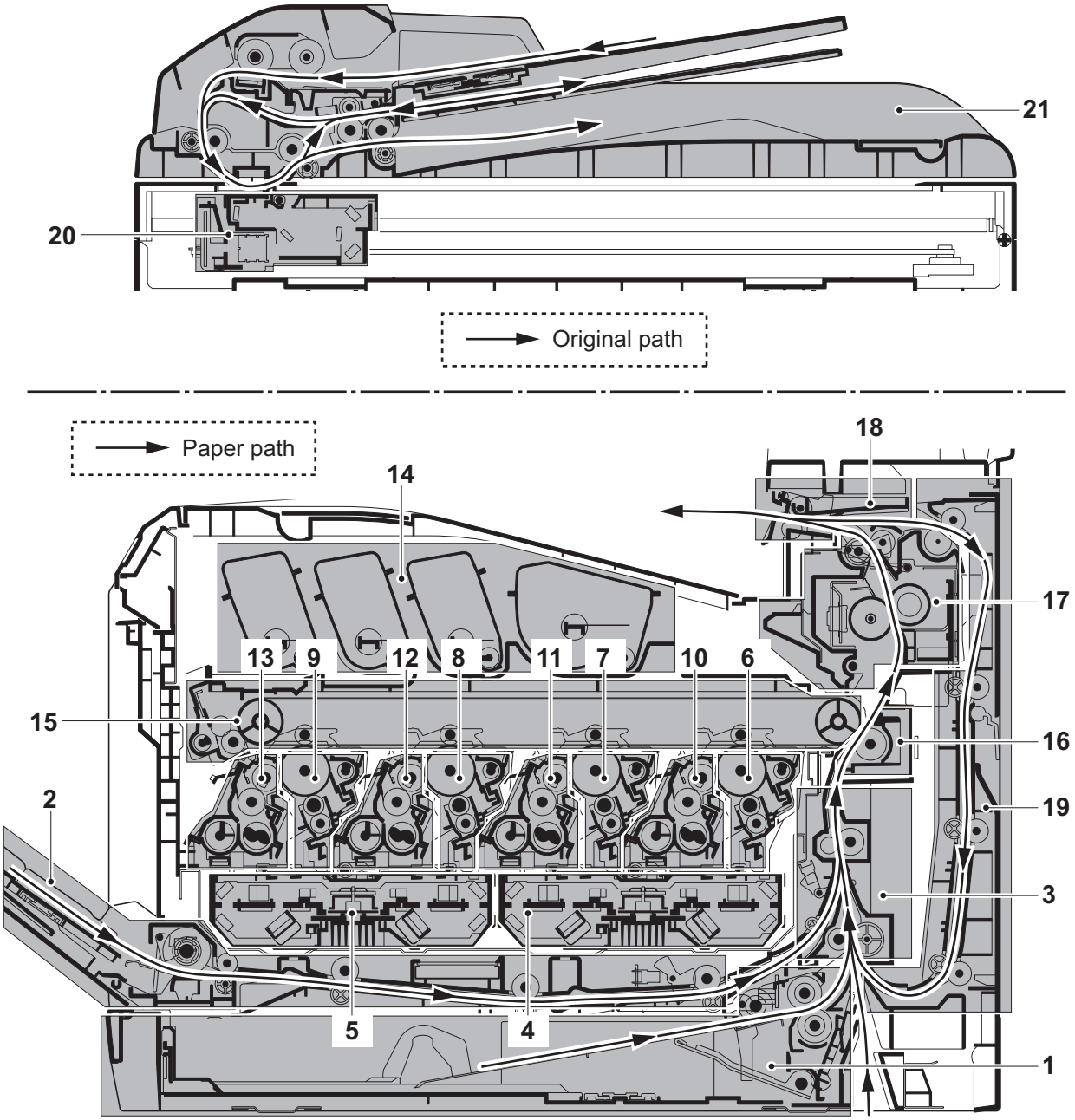

Figure 1-1-5

1. Cassette paper feed section
2. MP tray paper feed section
3. Paper conveying section
4. Laser scanner unit KM
5. Laser scanner unit CY
6. Drum unit K
7. Drum unit M
8. Drum unit C
9. Drum unit Y
10. Developing unit K
11. Developing unit M
12. Developing unit C
13. Developing unit Y
14. Toner container section
15. Primary transfer section
16. Secondary transfer/Separation sections
17. Fuser section
18. Eject/Feed shift sections
19. Duplex section
20. Image scanner unit
21. Document processor

1-2-1 Installation environment

1. Temperature: 10 to 32.5°C/50 to 90.5°F
2. Humidity: 15 to 80% RH
3. Power supply: 120 V AC, 9.0 A
   220 - 240 V AC, 5.0 A
4. Power source frequency: 50 Hz ±2%/60 Hz ±2%
5. Installation location
   Avoid direct sunlight or bright lighting. Ensure that the photoconductor will not be exposed to direct sunlight or other strong light when removing paper jams.
   Avoid locations subject to high temperature and high humidity or low temperature and low humidity; an abrupt change in the environmental temperature; and cool or hot, direct air.
   Avoid places subject to dust and vibrations.
   Choose a surface capable of supporting the weight of the machine.
   Place the machine on a level surface (maximum allowance inclination: 1°).
   Avoid air-borne substances that may adversely affect the machine or degrade the photoconductor, such as mercury, acidic of alkaline vapors, inorganic gasses, NOx, SOx gases and chlorine-based organic solvents.
   Select a well-ventilated location.
6. Allow sufficient access for proper operation and maintenance of the machine.

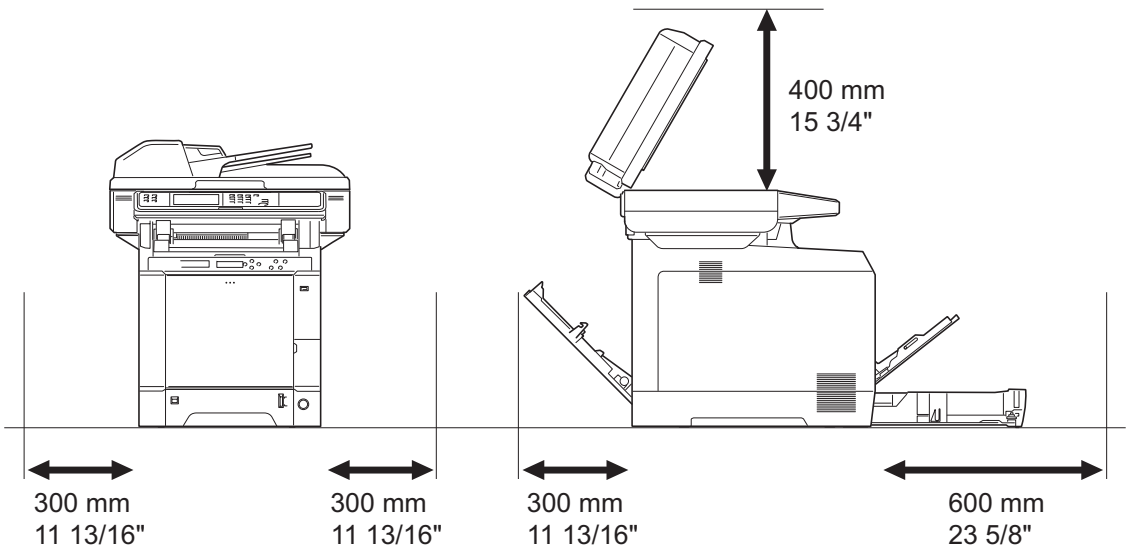

Figure 1-2-1

1-2-2 Unpacking

Unpacking

220-240 V AC model

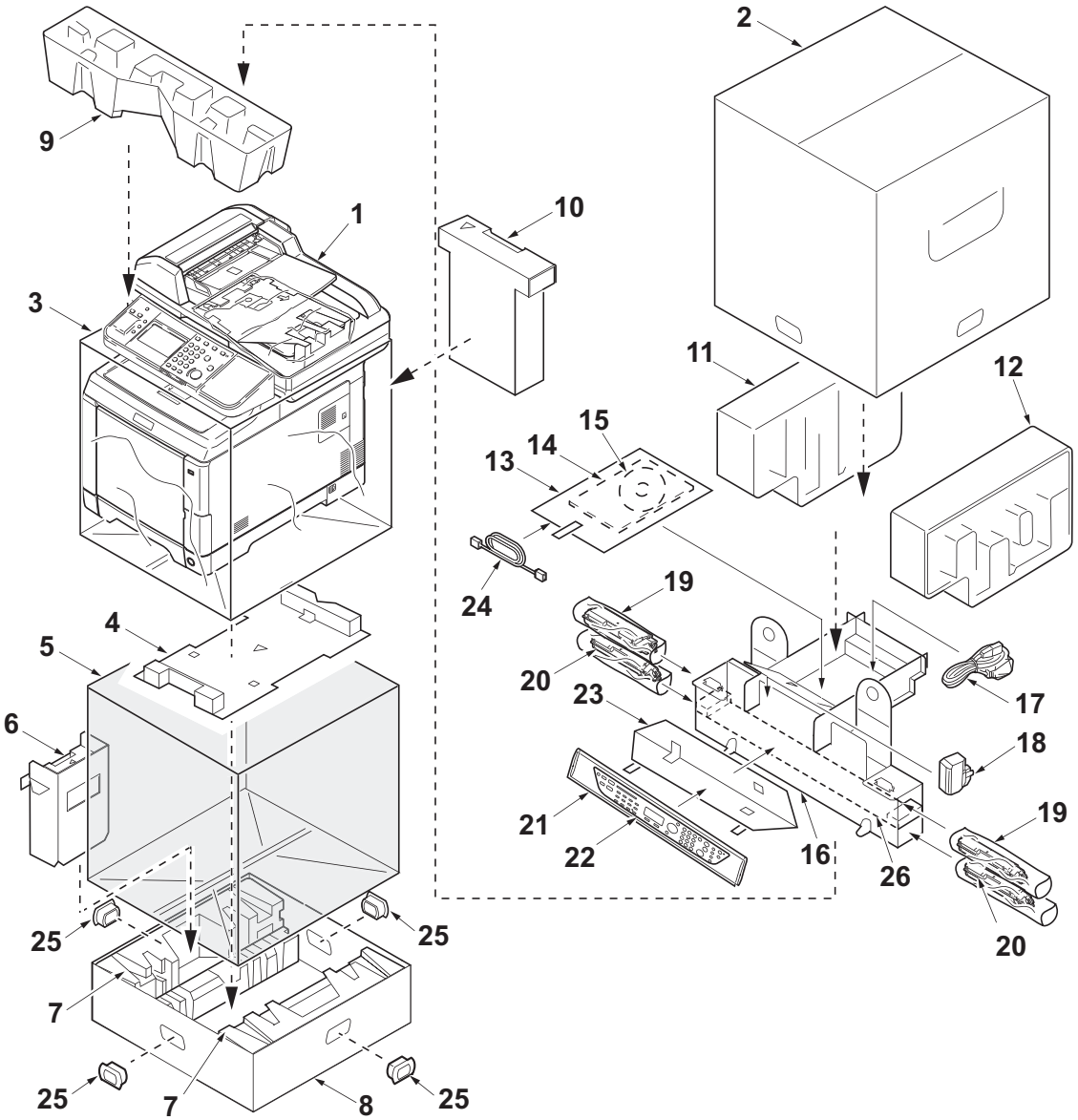

Figure 1-2-2

1. Machine
2. Outer case
3. Machine cover (620 × 580)
4. Bottom spacer
5. Plastic bag (650 × 650)
6. Left spacer
7. Bottom pads
8. Bottom case
9. Front pad
10. Rear pad
11. Top pad L
12. Top pad R
13. Plastic bag (240 × 350)
14. Installation guide etc.
15. CD-ROM
16. Middle spacer
17. Power cord
18. Waste toner box
19. Toner containers
20. Plastic bags (200 × 450)
21. Plastic bag (250 × 600)
22. Operation labels
23. Operation label pad
24. Modular cable*
25. Hinge joints
26. Middle spacer B

*: 4 in 1 model (with FAX) only.

120 V AC model

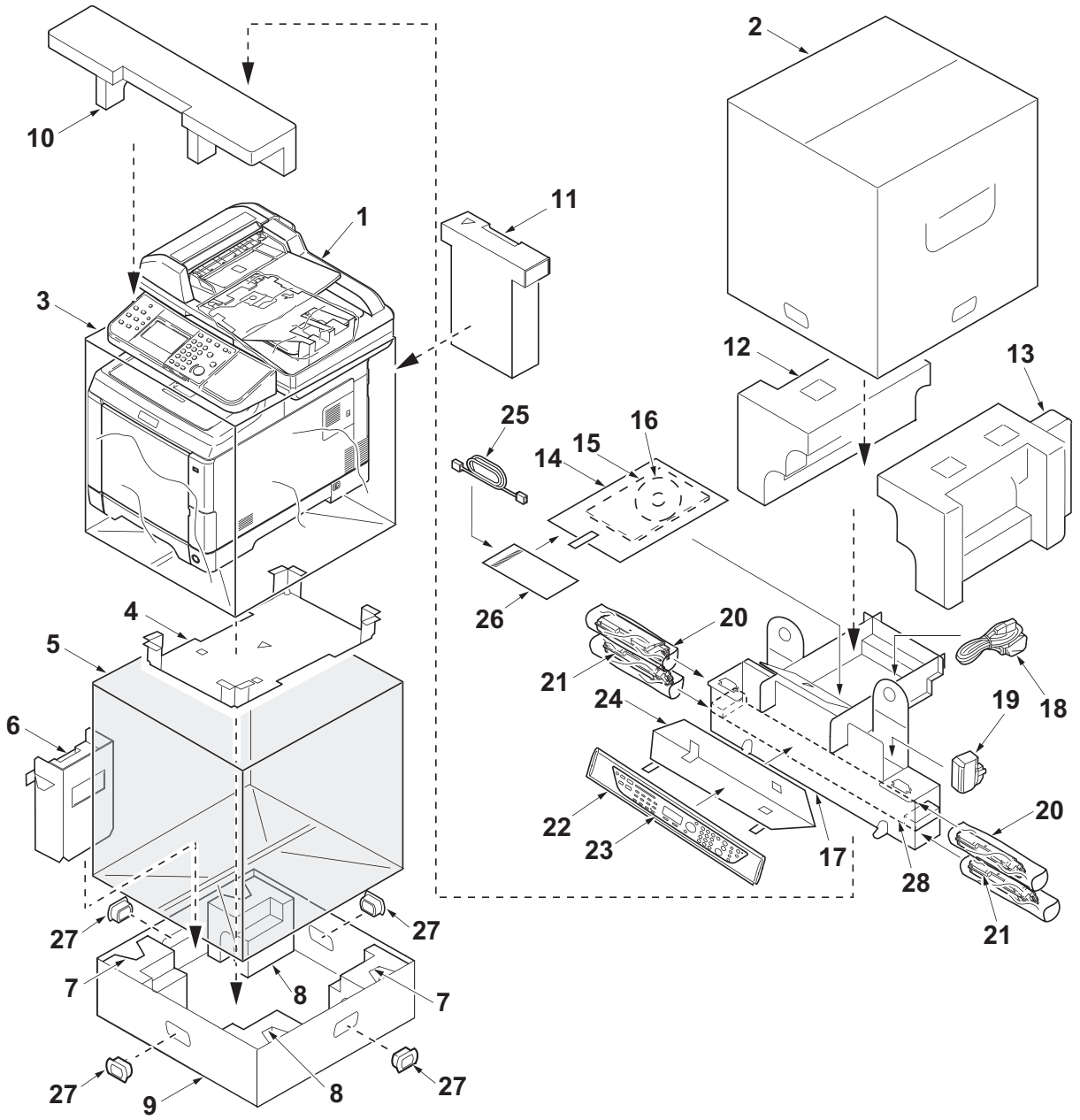

Figure 1-2-3

1. Machine
2. Outer case
3. Machine cover (620 × 580)
4. Bottom spacer
5. Plastic bag (650 × 650)
6. Left spacer
7. Bottom pads A
8. Bottom pads B
9. Bottom case
10. Front pad
11. Rear pad
12. Top pad L
13. Top pad R
14. Plastic bag (240 × 350)
15. Installation guide etc.
16. CD-ROM
17. Middle spacer
18. Power cord
19. Waste toner box
20. Toner containers
21. Plastic bags (200 × 450)
22. Plastic bag (250 × 600)
23. Operation labels
24. Operation label pad
25. Modular cable*
26. Plastic bag*
27. Hinge joints
28. Middle spacer B

*: 4 in 1 model (with FAX) only.

Place the machine on a level surface.

Removing the tapes and pads

1. Open the DP.
2. Remove two tapes.
3. Remove the sheet.

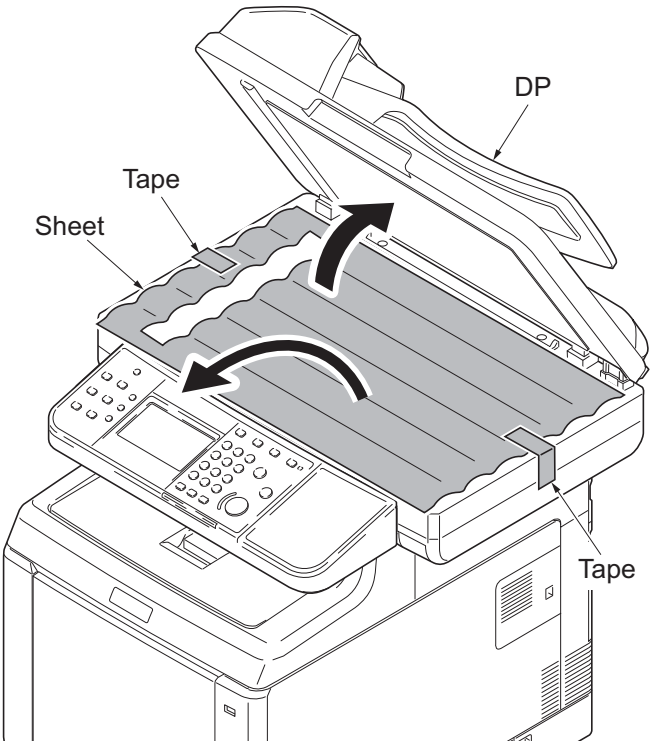

Figure 1-2-4

4. Remove the paper.

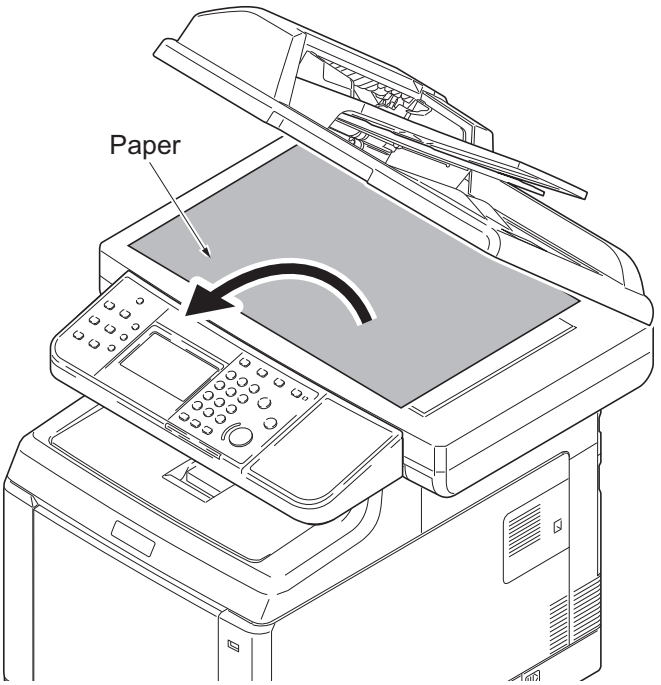

Figure 1-2-5

5. Remove tape A and pad.
6. Move the lock lever to the position of release.
   * : When turning on power if the lock lever is not released, the error message is displayed.
7. Remove two tapes B.
8. Remove the protection film.
9. Close the DP.

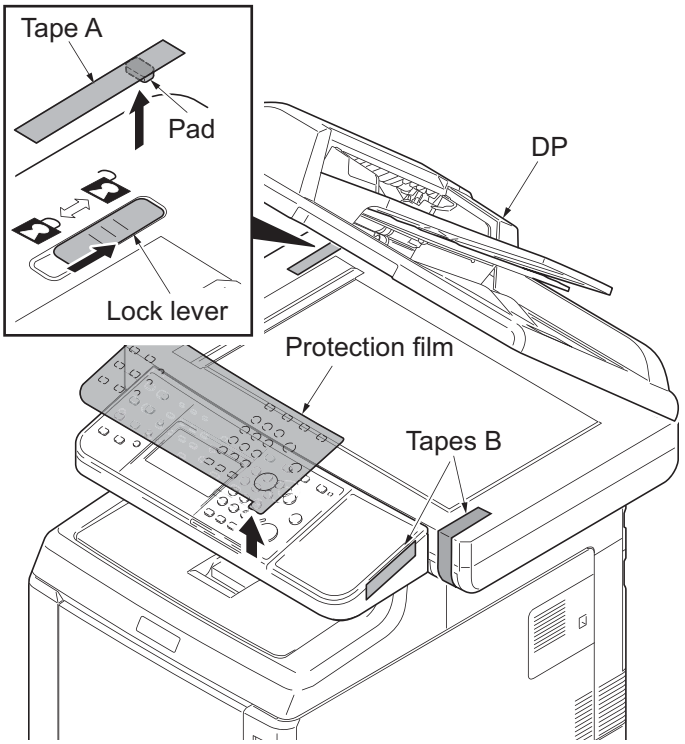

Figure 1-2-6

10. Remove two tapes.

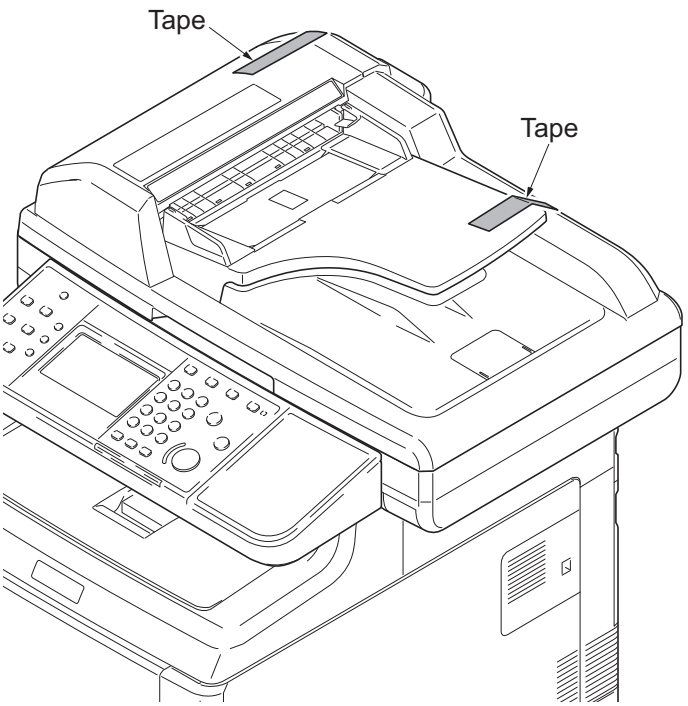

Figure 1-2-7

11. Open the DP top cover.
12. Remove two tapes.
13. Close the DP top cover.

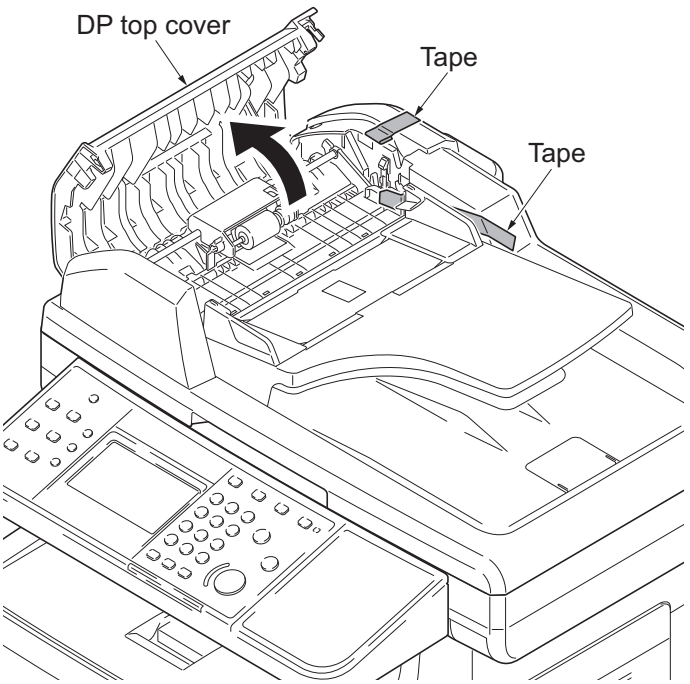

Figure 1-2-8

14. Remove six tapes.

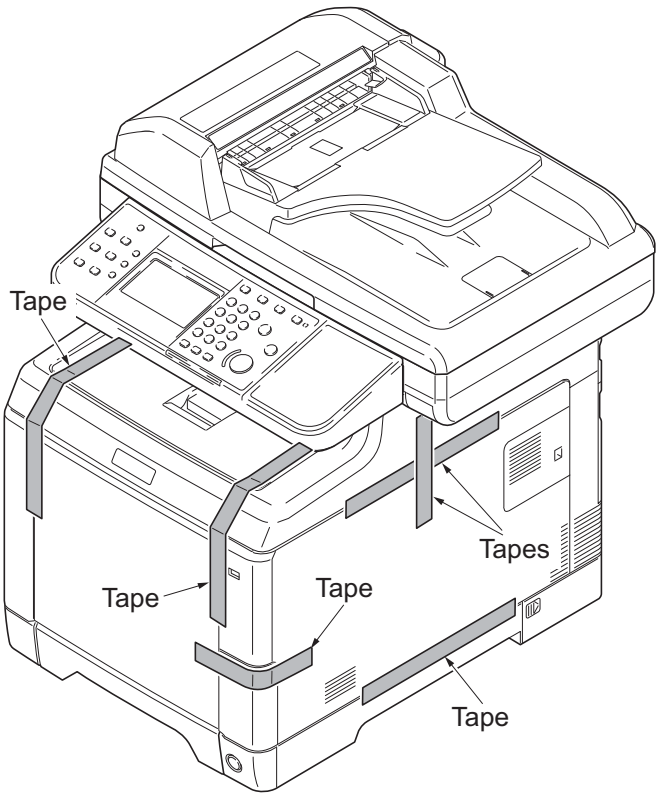

Figure 1-2-9

15. Remove five tapes.

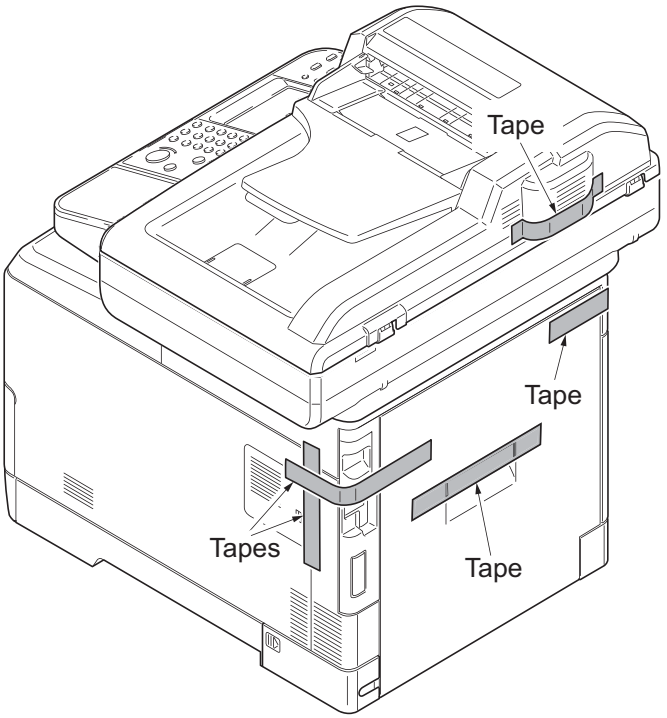

Figure 1-2-10

16. Open the inner tray.
17. Remove pads A and B.
18. Close the inner tray.

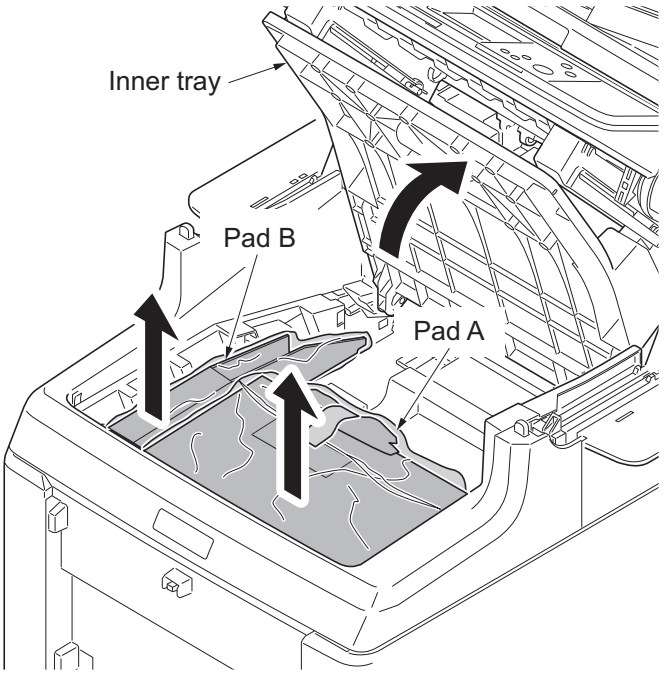

Figure 1-2-11

Installing the toner containers

1. Slide the release lever backward.

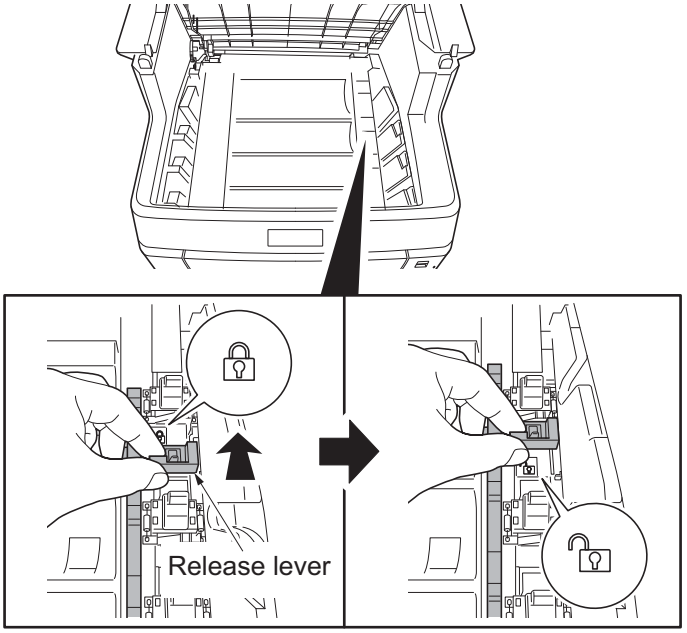

Figure 1-2-12

2. Facing the toner feed slot up and shake the toner container 5 to 6 times.

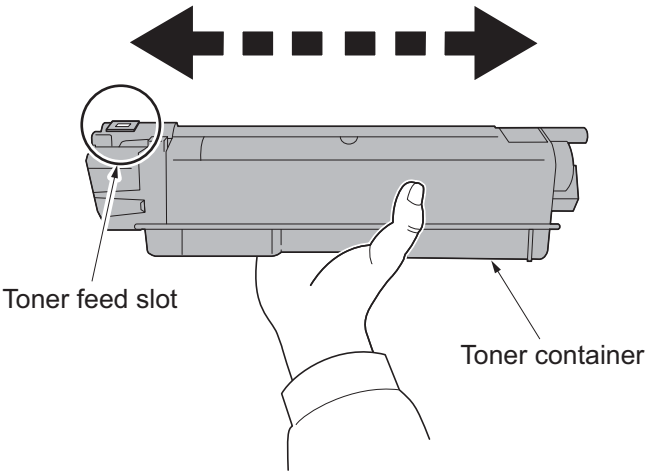

Figure 1-2-13

3. Install toner containers (K, M, C, Y).
4. Close the inner tray.

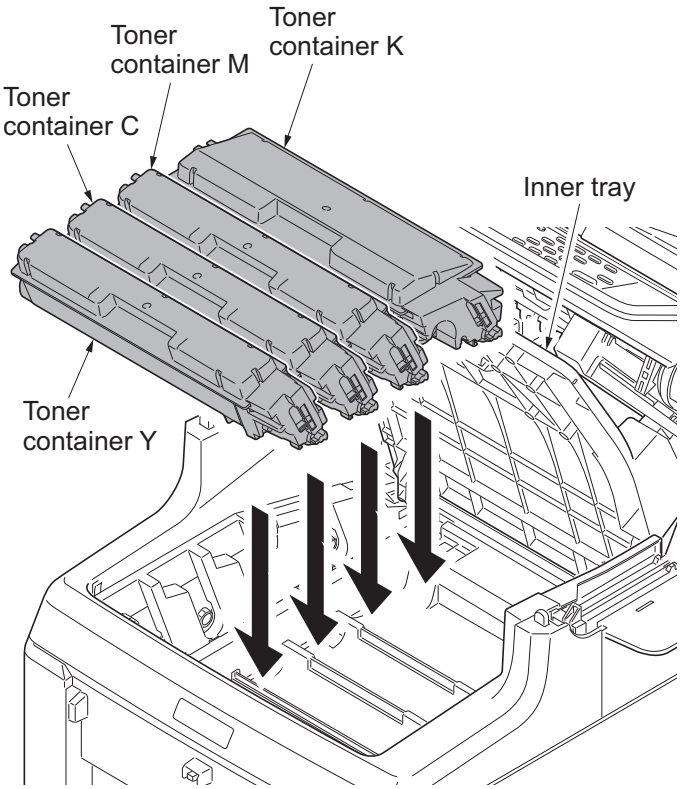

Figure 1-2-14

Installing the waste toner box

1. Open the waste toner cover.
2. Open the cap of the waste toner box.
3. Install the waste toner box.
4. Close the waste toner cover.

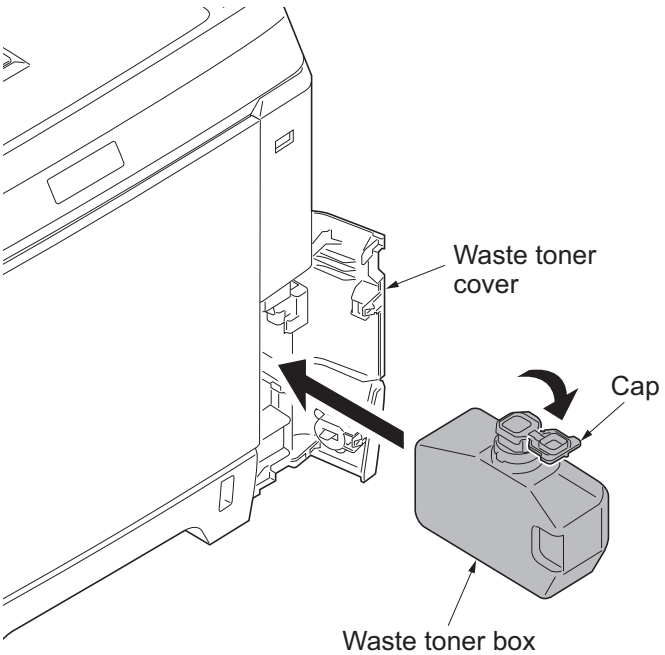

Figure 1-2-15

Loading paper

1. Pull the cassette out.
2. While pressing the width lever, adjust the paper width guides to fit the paper size.
3. While pressing the length lever, adjust the paper length guide to fit the paper size.

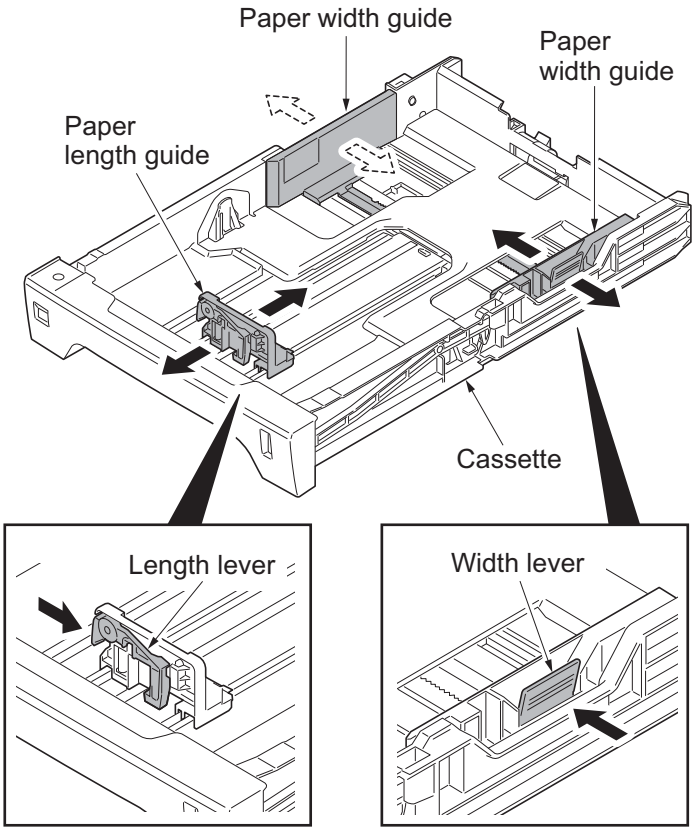

Figure 1-2-16

4. Load the paper in the cassette.
5. Turn the paper size dial so that it shows the paper size you are going to use.
6. Insert the cassette.

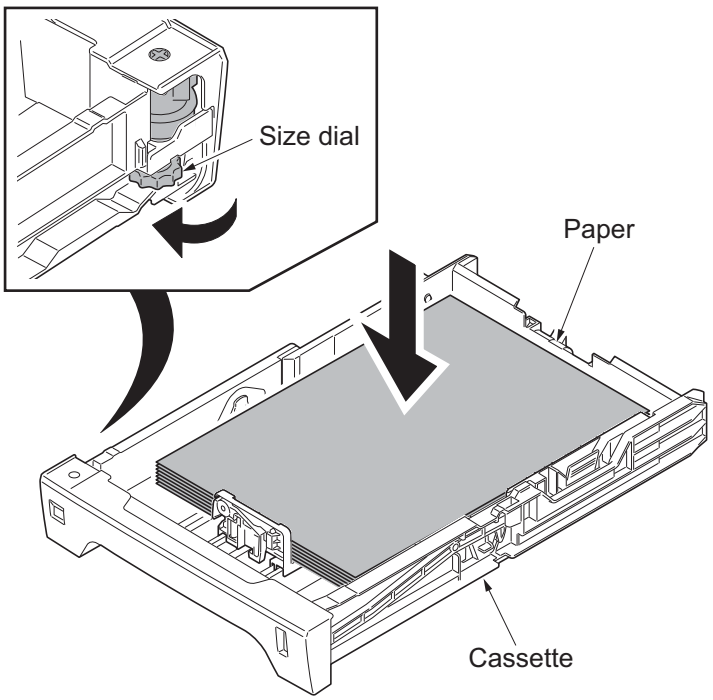

Figure 1-2-17

Connecting the interface cable

1. Connect the interface cable to the machine and PC or network.

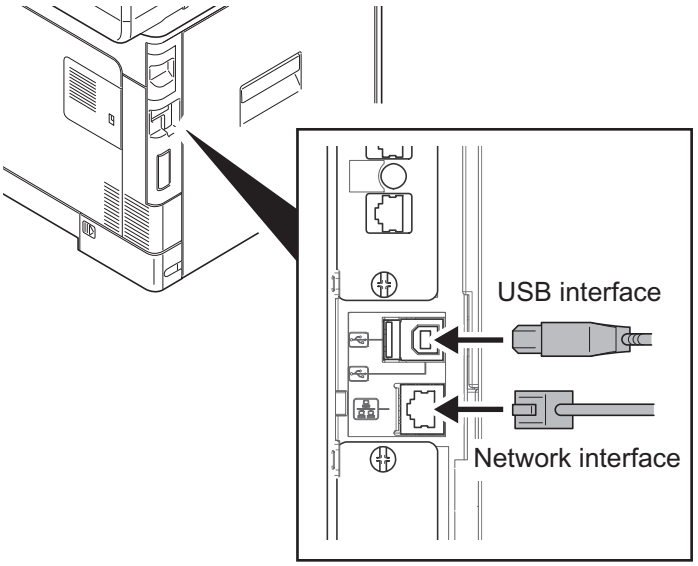

Figure 1-2-18

Connecting the power cord

1. Remove the power cord cover.
2. Connect the power cord to the machine and the wall outlet.
3. Refit the power cord cover.
4. Press the main power switch to turn power on.
5. Installing the printer driver (refer to operation guide).

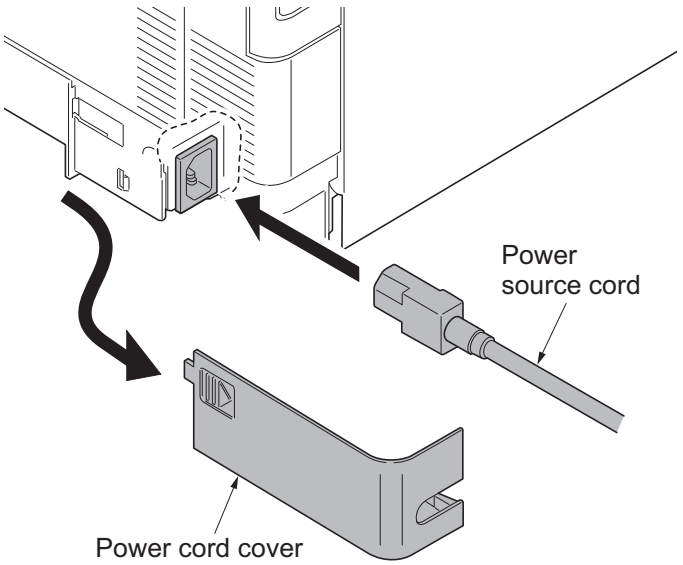

Figure 1-2-19

* : Perform the high altitude settings when a leakage is developed on images in a high altitude installation?such as in Mexico City (see page P.1-3-92).

Completion of the machine installation

1-2-3 Installing the expansion memory (option)

Procedure

1. Turn off the main power switch.
   Caution: Do not insert or remove expansion memory while machine power is on.
   Doing so may cause damage to the machine and the expansion memory.
2. Remove the memory cover.

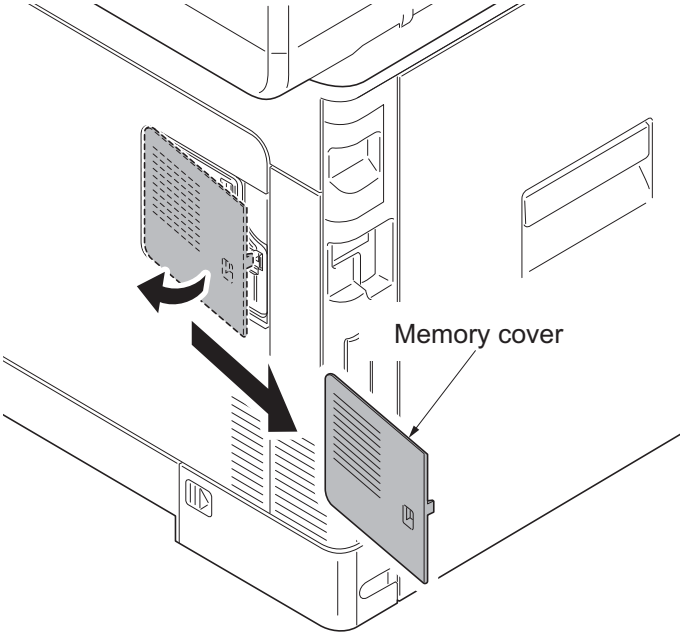

Figure 1-2-20

3. Release the hook and then open the fan bracket.

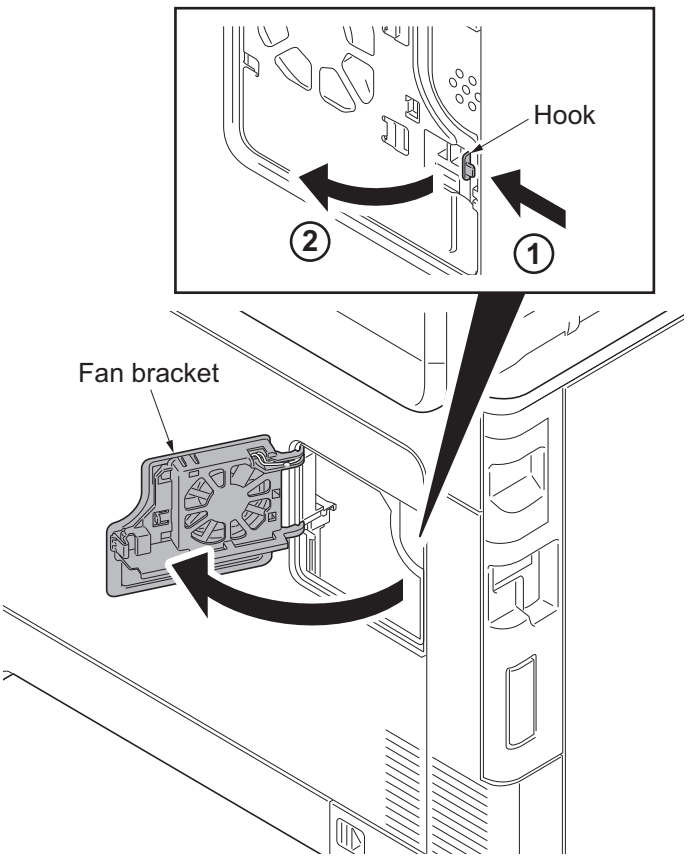

Figure 1-2-21

4. Insert the expansion memory into the memory socket so that the notches on the memory align with the corresponding protrusions in the slot.
5. Close the fan bracket.
6. Refit the memory cover.
7. Print a status page to check the memory expansion (see page 1-3-80).
   If memory expansion has been properly performed, information on the installed memory is printed with the total memory capacity has been increased. Standard memory capacity 1024 MB.

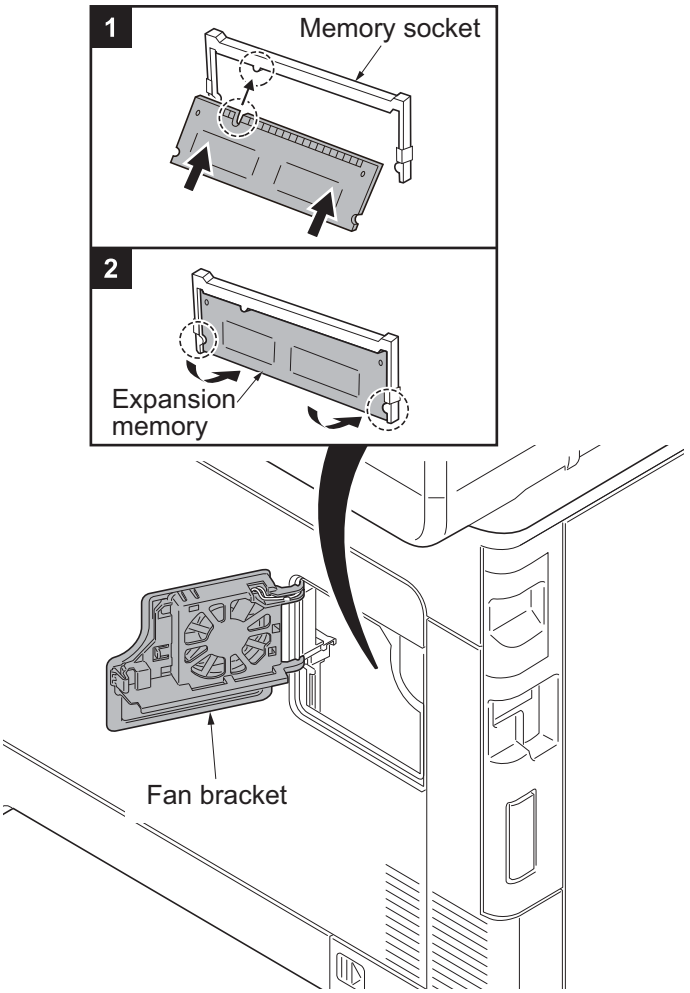

Figure 1-2-22

1-2-4 Installing the SD card (option)

<Procedure>

1. Turn off the main power switch.
   Caution: Do not insert or remove SD card while machine power is on. Doing so may cause damage to the machine and the SD card.
2. Remove the IF cover.
   (see page 1-5-3)
3. Remove two screws and then remove the option interface slot cover.
4. Install the SD card into the option interface slot.
5. Refit the option interface slot cover by two screws.
6. Refit the IF cover.

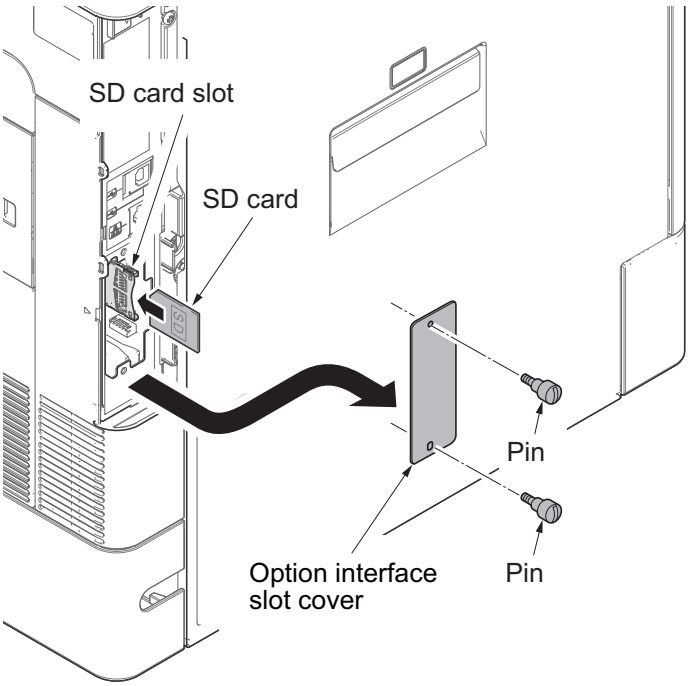

Figure 1-2-23

1-3-1 Maintenance mode

The machine is equipped with a maintenance function which can be used to maintain and service the machine.

(1) Executing a maintenance item

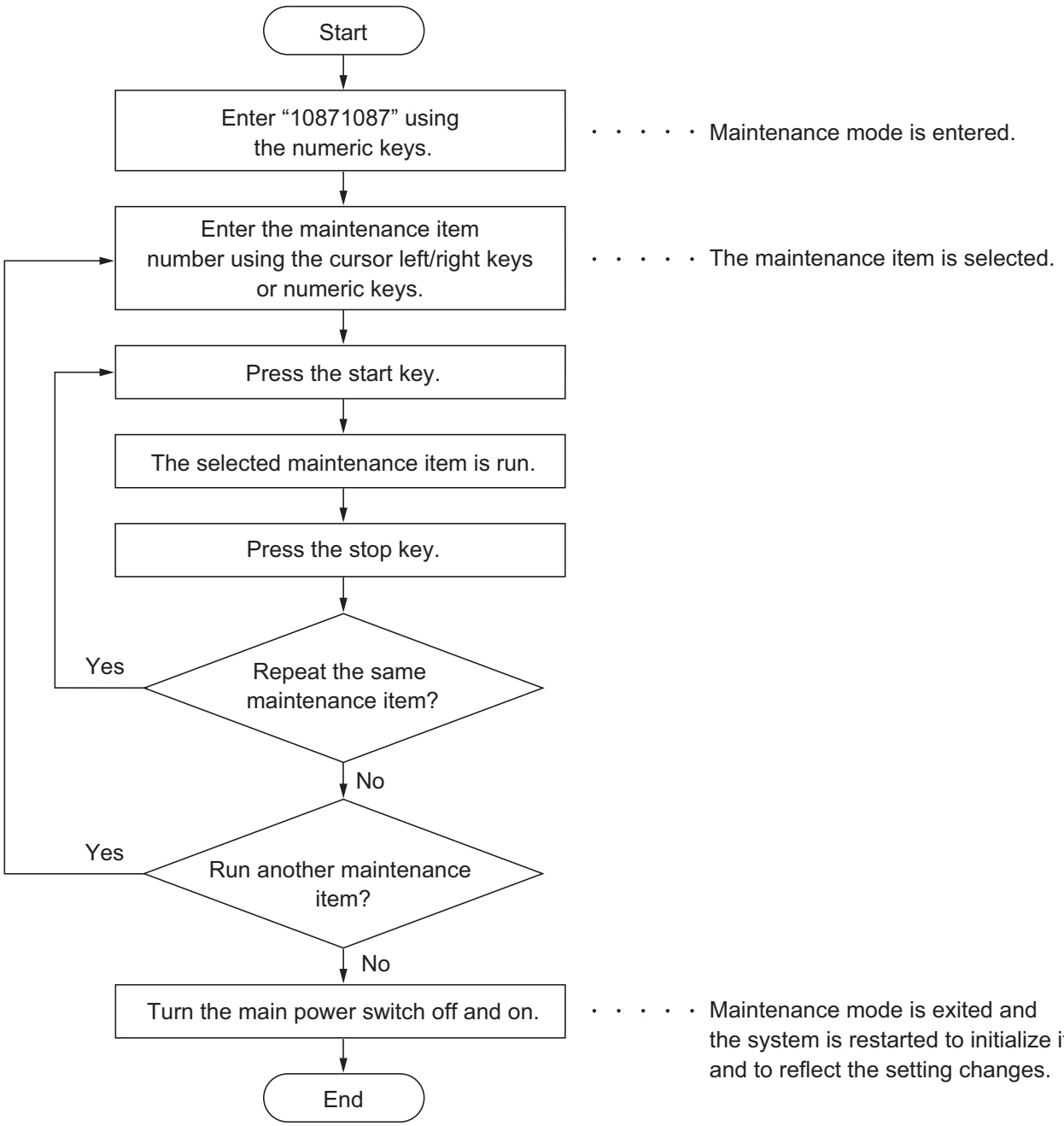

(2) Maintenance modes item list

Section	Item No.	Content of maintenance item	Initial setting
General	U000	Outputting an own-status report	-
	U001	Exit Maintenance Mode	-
	U002	Setting the factory default data	-
	U004	Setting the machine number	-
	U010	Set Mainte ID	-
	U019	Firmware Version	-
Initialization	U021	Memory initializing	-
Drive, paper feed and paper conveying system	U034	Adjust Paper Timing Data LSU Out Top LSU Out Left	 600/0/0/0 600/0/0/0/0/0
Optical	U065	Adjust Scanner Motor Speed	0/0
	U066	Adjust Table Leading Edge Timing	0/0
	U067	Adjust Table Center	0/0
	U068	Adjust DP Scan Position	0/0
	U070	Adjust DP Motor Speed	0
	U071	Adjust DP Leading Edge Timing	0/0/0/0/0
	U072	Adjust DP Original Center	0/12/0
Operation panel and support equipment	U203	Checking DP operation	-
	U222	Setting the IC card type	Other
Mode setting	U250	Setting the maintenance cycle	200000
	U251	Checking/clearing the maintenance count	0
	U252	Setting the destination	-
	U253	Switching between double and single counts	Double count
	U260	Selecting the timing for copy counting	Eject
	U285	Setting service status page	On
	U332	Setting the size conversion factor	1.0 /0/1.0/2.5
	U345	Setting the value for maintenance due indication	0
	U346	Selecting Sleep Mode	On/On

Section	Item No.	Content of maintenance item	Initial setting
Image processing	U402	Adjust Print Margin	4.0/4.0/4.0/4.0
	U403	Adjust Scanning Margin(Table)	2.0/2.0/2.0/2.0
	U404	Adjust Scanning Margin(DP)	3.0/2.5/3.0/4.0
	U410	Adjusting the halftone automatically	-
	U411	Auto Adj Scn	-
	U425	Set Target	-
Fax	U600	Initializing all data	-
	U601	Initializing permanent data	-
	U603	Setting user data 1	DTMF
	U604	Setting user data 2	2 (120 V) 1 (220-240 V)
	U605	Clearing data	-
	U610	Setting system 1 Setting the number of lines to be ignored when receiving a fax at 100% magnification Setting the number of lines to be ignored when receiving a fax in the auto reduction mode Setting the number of lines to be ignored when receiving a fax (A4R/LetterR) in the auto reduction mode	 3 0 0
	U611	Setting system 2 Setting the number of adjustment lines for automatic reduction Setting the number of adjustment lines for automatic reduction when A4 paper is set Setting the number of adjustment lines for automatic reduction when letter size paper is set	 7 22 26
	U612	Setting system 3 Selecting if auto reduction in the auxiliary direction is to be performed Setting the automatic printing of the protocol list Setting how trailing edge margins are detected	 On Off On
	U620	Setting the remote switching mode	One
	U625	Setting the transmission system 1 Setting the auto redialing interval Setting the number of times of auto redialing	 3 (120 V) 2 (220-240 V) 2 (120 V) 3 (220-240 V)
	U630	Setting communication control 1 Setting the communication starting speed Setting the reception speed Setting the waiting period to prevent echo problems at the sender Setting the waiting period to prevent echo problems at the receiver	 14400bps/V17 14400bps 300 75

Section	Item No.	Content of maintenance item	Initial setting
Fax	U631	Setting communication control 2 Setting ECM transmission Setting ECM reception Setting the frequency of the CED signal	 On On 2100
	U632	Setting communication control 3 Setting the DIS signal to 4 bytes Setting the CNG detection times in the fax/telephone auto select mode	 Off 2Time
	U633	Setting communication control 4 Enabling/disabling V.34 communication Setting the number of times of DIS signal reception Setting the number of times of DIS signal reception Setting the reference for RTN signal output	 On On Once 15%
	U634	Setting communication control 5	0
	U640	Setting communication time 1 Setting the one-shot detection time for remote switching Setting the continuous detection time for remote switching	 7 80
	U641	Setting communication time 2 Setting the T0 time-out time Setting the T1 time-out time Setting the T2 time-out time Setting the Ta time-out time Setting the Tb1 time-out time Setting the Tb2 time-out time Setting the Tc time-out time Setting the Td time-out time	 56 36 69 30 20 80 60 9 (120 V) 6 (220-240 V)
	U650	Setting modem 1 Setting the G3 transmission cable equalizer Setting the G3 reception cable equalizer Setting the modem detection level	 0dB 0dB -43dBm
	U651	Setting modem 2 Modem output level DTMF output level (main value) DTMF output level (level difference)	 9 (120 V) 10 (220-240 V) 5 (120 V) 10.5 (220-240 V) 2 (120 V) 2.5 (220-240 V)
	U660	Setting the NCU Setting the connection to PBX/PSTN Setting PSTN dial tone detection Setting busy tone detection Setting for a PBX Setting the loop current detection before dialing	 PSTN On On Loop On
	U670	Outputting lists	-
	U695	FAX function customize	On/Off

Section	Item No.	Content of maintenance item	Initial setting
Fax	U699	Setting the software switches	-
Others	U910	Clearing the print coverage data	-
	U917	Setting backup data reading/writing	-
	U920	Checking the copy counts	-
	U927	Clearing the all copy counts and machine life counts (one time only)	-
	U928	Checking machine life counts	-
	U977	Data capture mode	-
	U995	Memory data Individual setting	-

(3) Contents of the maintenance mode items

<table>
<tr><th>Item No.</th><th>Description</th></tr>
<tr><td>U000</td><td>

Outputting an own-status report

Description
Outputs lists of the current settings of the maintenance items and paper jam and service call occurrences. Outputs the event log. Also sends output data to the USB memory.
Purpose
To check the current setting of the maintenance items, or paper jam or service call occurrences. Before initializing or replacing the backup RAM, output a list of the current settings of the maintenance items to reenter the settings after initialization or replacement.

Method
1. Press the start key.
2. Select the item to be output.

Display	Output list
Maintenance	List of the current settings of the maintenance modes
User Status	Outputs the user status page
Svc Status	Outputs service status page
Event	Outputs the event log
NW Status	Outputs network status page
All	Outputs the all reports

3. Press the start key. A list is output.

Method: Send to the USB memory
1. Press the power key on the operation panel, and after verifying the main power indicator has gone off, switch off the main power switch.
2. Insert USB memory in USB memory slot.
3. Turn the main power switch on.
4. Enter the maintenance item.
5. Press the start key.
6. Select the item to be send.
7. Select [Text] or [HTML].

Display	Output list
Print	Outputs the report
USB (Text)	Sends output data to the USB memory (text type)
USB (HTML)	Sends output data to the USB memory (HTML type)

8. Press the start key.
   Output will be sent to the USB memory.

Completion
Press the stop key. The screen for selecting a maintenance item No. is displayed.

</td></tr>
</table>

Item No.	Description
U000	**Event log**

Event Log

MFP

(2) 2013/07/18 15:15

(1) Firmware version 2PY_2000.000.000 2013.07.18

(3) [XXXXXXXX] (4) [XXXXXXXX] (5) [XXXXXXXX]

(7) Paper Jam Log

#	Count.	Event Descriprions	Data and Time
12	1876543	0501.01.08.01.01	2013/03/02 11:11
11	166554	4020.01.08.01.01	2013/03/02 10:57
10	4988	0501.01.08.01.01	2013/03/02 10:44
9	4988	4020.01.08.01.01	2013/03/02 10:00
8	1103	0501.01.08.01.01	2013/03/02 09:27
7	1103	4020.01.08.01.01	2013/03/01 17:30
6	1027	0501.01.08.01.01	2013/03/01 10:02
5	1027	4020.01.08.01.01	2013/03/01 08:57
4	1027	0501.01.08.01.01	2013/02/29 17:00
3	1027	4020.01.08.01.01	2013/02/29 15:38
2	406	0501.01.08.01.01	2013/02/28 09:00
1	36	4020.01.08.01.01	2013/02/28 08:12

0501.01.08.01.01
(a) (b) (c) (d) (e)

(8) Service Call Log

#	Count.	Service Code	Data and Time
8	1881214	01.6000	2013/03/02 11:11
7	178944	01.2100	2013/03/02 10:57
6	5296	01.4000	2013/03/02 10:44
5	5295	01.6000	2013/03/02 10:00
4	2099	01.2100	2013/03/02 09:27
3	1054	01.4000	2013/03/01 17:30
2	809	01.6000	2013/03/01 10:02
1	30	01.2100	2013/03/01 08:57

(9) Maintenance Log

#	Count.	Item	Data and Time
3	104511	01.00	2013/03/02 11:11
2	3454	01.01	2013/03/02 10:57
1	34	01.01	2013/03/02 10:44

(10) Unknown toner Log

#	Count.	Item	Data and Time
4	3454	01.00	2013/03/02 11:11
3	3454	01.00	2013/03/02 10:57
2	406	01.00	2013/03/02 10:44
1	32	01.00	2013/03/02 10:00

(11) Counter Log

(f)	(g)	(h)
J0100: 0	C0000: 0	T00: 10
J0105: 0	C0001: 1	T01: 20
J0106: 0	C0002: 2	T02: 30
J0110: 0	C0003: 3	T03: 40
J0111: 0	C0004: 4	T04: 50
J0512: 0	C0005: 5	T05: 999
J0513: 0	C0006: 6	
J0518: 0	C0007: 7	
J0519: 0	C0008: 8	
J1020: 0	C0009: 9	
J4201: 0	C0010: 10	
J4202: 0	C0011: 11	
J4203: 0		
J4208: 0		
J4209: 0		
.		
.		
.		
.		
.		
.		

(6) [XXXXXXXXXXXXXXXX]

Figure 1-3-1

Detail of event log

No.	Items	Description
(1)	System version	
(2)	System date	
(3)	Engine soft version	
(4)	Engine boot version	
(5)	Operation panel mask version	
(6)	Machine serial number	

Item No.	Description
U000	

No.	Items	Description
(7) cont.	Paper Jam Log	4002: Registration sensor does not turn ON (Paper feeder 1) 4003: Registration sensor does not turn ON (Paper feeder 2) 4009: Registration sensor does not turn ON (MP tray) 4012: Registration sensor does not turn OFF (Paper feeder 1) 4013: Registration sensor does not turn OFF (Paper feeder 2) 4019: Registration sensor does not turn OFF (MP tray) 4020: Registration sensor is turned ON 4201: Eject sensor does not turn ON (Cassette) 4202: Eject sensor does not turn ON (Paper feeder 1) 4203: Eject sensor does not turn ON (Paper feeder 2) 4208: Eject sensor does not turn ON (Duplex) 4209: Eject sensor does not turn ON (MP tray) 4211: Eject sensor does not turn OFF (Cassette) 4212: Eject sensor does not turn OFF (Paper feeder 1) 4213: Eject sensor does not turn OFF (Paper feeder 2) 4218: Eject sensor does not turn OFF (Duplex) 4219: Eject sensor does not turn OFF (MP tray) 4220: Eject sensor is turned ON 9010: DP top cover open 9400: No original feed 9401: An original jam in the original switchback section 2 9410: An original jam in the original conveying section 9411: An original jam in the original switchback section 1
		(b) Detail of paper source (Hexadecimal)
		00: MP tray 01: Cassette 1 02: Cassette 2 (paper feeder 1) 03: Cassette 3 (paper feeder 2) 04 to 09: Reserved
		(c) Detail of paper size (Hexadecimal)

00: (Not specified) 01: Monarch 02: Business 03: International DL 04: International C5 05: Executive 06: Letter-R 86: Letter-E 07: Legal 08: A4R 88: A4E 09: B5R 89: B5E 0A: A3	0B: B4 0C: Ledger 0D: A5R 0E: A6 0F: B6 10: Commercial #9 11: Commercial #6 12: ISO B5 13: Custom size 1E: C4 1F: Postcard 20: Reply-paid post-card 21: Oficio II	22: Special 1 23: Special 2 24: A3 wide 25: Ledger wide 26: Full bleed paper (12 x 8) 27: 8K 28: 16K-R A8: 16K-E 32: Statement-R B2: Statement-E 33: Folio 34: Western type 2 35: Western type 4

Item No.	Description
U000	

No.	Items	Description		
(7) cont.	Paper Jam Log	(d) Detail of paper type (Hexadecimal)		
		01: Plain 02: Transparency 03: Preprinted 04: Labels 05: Bond 06: Recycled 07: Vellum 08: Rough 09: Letterhead	0A: Color 0B: Prepunched 0C: Envelope 0D: Cardstock 0E: Coated 0F: 2nd side 10: Thick 11: High quality	15: Custom 1 16: Custom 2 17: Custom 3 18: Custom 4 19: Custom 5 1A: Custom 6 1B: Custom 7 1C: Custom 8
		(e) Detail of paper eject location (Hexadecimal)		
		01: Face down (FD)		
(8)	Service Call Log	#	Count.	Service Code
		Remembers 1 to 8 of occurrence of self diagnostics error. If the occurrence of the previous diagnostics error is less than 8, all of the diagnostics errors are logged.	The total page count at the time of the self diagnostics error.	Self diagnostic error code (See page 1-4-5) Example: 01.6000 01: Self diagnostic error 6000: Self diagnostic error code number
(9)	Maintenance Log	#	Count.	Item
		Remembers 1 to 8 of occurrence of replacement. If the occurrence of the previous replacement of toner container is less than 8, all of the occurrences of replacement are logged.	The total page count at the time of the replacement of the toner container. * :The toner replacement log is triggered by toner empty. This record may contain such a reference as the toner container is inserted twice or a used toner container is inserted.	Code of maintenance replacing item (1 byte, 2 categories) First byte (Replacing item) 01: Toner container Second byte (Type of replacing item) 00: Black 01: Cyan 02: Magenta 03: Yellow First byte (Replacing item) 02: Maintenance kit Second byte (Type of replacing item) 01: MK-590/592

Item No.	Description
U000	

No.	Items	Description		
(10)	Unknown Toner Log	#	Count.	Item
		Remembers 1 to 5 of occurrence of unknown toner detection. If the occurrence of the previous unknown toner detection is less than 5, all of the unknown toner detection are logged.	The total page count at the time of the toner empty error with using an unknown toner container.	Unknown toner log code (1 byte, 2 categories) First byte 01: Toner container (Fixed) Second byte 00: Black 01: Cyan 02: Magenta 03: Yellow
(11)	Counter Log Comprised of three log counters including paper jams, self diagnostics errors, and replacement of the toner container.	(f) Paper jam	(g) Self diagnostic error	(h) Maintenance item replacing
		Indicates the log counter of paper jams depending on location. Refer to Paper Jam Log. All instances including those are not occurred are displayed.	Indicates the log counter of self diagnostics errors depending on cause. (See page 1-4-5) Example: C6000: 4 Self diagnostics error 6000 has happened four times.	Indicates the log counter depending on the maintenance item for maintenance. T: Toner container 00: Black 01: Cyan 02: Magenta 03: Yellow M: Maintenance kit 01: MK-590/592 Example: T00: 1 The toner container has been replaced once. * :The toner replacement log is triggered by toner empty. This record may contain such a reference as the toner container is inserted twice or a used toner container is inserted.

<table>
<tr><th>Item No.</th><th>Description</th></tr>
<tr><td>U001</td><td>

Exit Maintenance Mode

Description
Exits the maintenance mode and returns to the normal copy mode.
Purpose
To exit the maintenance mode.

Method
1. Press the start key. The normal copy mode is entered.

</td></tr>
<tr><td>U002</td><td>

Setting the factory default data

Description
Restores the machine conditions to the factory default settings.
Purpose
To move the image scanner unit to the home position.

Method
1. Press the start key.
2. Select [Mode1(All)].
3. Press the start key.
   The imege scanner unit returns to the home position.
4. Turn the main power switch off and on.
   * : An error code is displayed in case of an initialization error.
   When errors occurred, turn main power switch off then on, and execute initialization using maintenance item U002.

Error codes

<table>
<tr><th>Codes</th><th>Description</th></tr>
<tr><td>0001</td><td>Controller error</td></tr>
<tr><td>0020</td><td>Engine error</td></tr>
<tr><td>0040</td><td>Scanner error</td></tr>
</table>

</td></tr>
</table>

Item No.	Description
U004	**Setting the machine number** **Description** Sets or displays the machine number. **Purpose** To check or set the machine number. **Method** 1. Press the start key. If the machine serial number of engine PWB matches with that of main PWB **Display** / **Description** Machine No. / Displays the machine serial number If the machine serial number of engine PWB does not match with that of main PWB **Display** / **Description** Machine No.(Main) / Displays the machine serial number of main Machine No.(Eng) / Displays the machine serial number of engine **Setting** Carry out if the machine serial number does not match. 1. Press [Execute]. 2. Press the start key. Writing of serial No. starts. **Completion** Press the stop key. The screen for selecting a maintenance item No. is displayed.

Item No.	Description
U010	**Set Mainte ID** **Description** Maintenance mode ID for markets is changed. **Purpose** The brittleness of a security function is improved by changing maintenance mode ID for markets. **Method** 1. Press the start key. 2. Select the item to be set. **[Setting: Change]** 1. Select the [New ID(Reconfirm)]. 2. New ID is inputted using a ten key. * : New ID of 8 figures is taken as the arbitrary combination of 0 to 9, *, and #. (* or # is certainly included) 3. Select the [Excute]. 4. Press the start key. ID is set. 5. Turn the main power switch off and on. Allow more than 5 seconds between Off and On. **[Setting: Initialaize]** 1. Select the [Excute]. 2. Press the start key. ID is intialized. 3. Turn the main power switch off and on. Allow more than 5 seconds between Off and On. **Completion** Press the stop key. The screen for selecting a maintenance item No. is displayed.

Display	Description
Change	Maintenance mode ID for markets is changed.
Initialize	Maintenance mode ID for markets is initialized.

Item No.	Description
U019	**Firmware Version** **Description** Displays the part number of the ROM fitted to each PWB. **Purpose** To check the part number or to decide, if the newest version of ROM is installed. **Method** 1. Press the start key. The ROM version are displayed. 2. Change the screen using the cursor up/down keys. **Completion** Press the stop key. The screen for selecting a maintenance item No. is displayed.

Display	Description
Main	Main ROM
MMI	Operation ROM
Browser	Browser ROM
Engine	Engine ROM
Engine Boot	Engine booting
Scanner	Scanner ROM
Scanner Boot	Scanner booting
Dictionary	-
Option Language	Optional language ROM
Color Table1	Color table 1 ROM
Color Table2	Color table 2 ROM
Cass2	Paper feeder 2
Cass3	Paper feeder 3
Fax APL	Fax APL
Fax Boot	Fax Boot
Fax IPL	Fax IPL
Application Name1	Softwere1
Application Name2	Softwere2
Application Name3	Softwere3
Application Name4	Softwere4
Application Name5	Softwere5

Item No.	Description
U021	**Memory initializing** **Description** Initializes all settings, except those pertinent to the type of machine, namely each counter, service call history and mode setting. Also initializes backup RAM according to region specification selected in maintenance item U252 Setting the destination. **Purpose** To return the machine settings to their factory default. **Method** 1. Press the start key. 2. Select [Execute]. 3. Press the start key. All data other than that for adjustments due to variations between machines is initialized based on the destination setting. 4. Turn the main power switch off and on. * : An error code is displayed in case of an initialization error. When errors occurred, turn main power switch off then on, and execute initialization using maintenance item U021. **Error codes** Codes: 0001 — Entity error 0002 — Controller error 0020 — Engine error 0040 — Scanner error

Item No.	Description
U034	**Adjust Paper Timing Data**

Description
Adjusts the leading edge registration or center line.
Purpose
Make the adjustment if there is a regular error between the leading edges of the copy image and original.
Make the adjustment if there is a regular error between the center lines of the copy image and original.

Method
1. Press the start key.
2. Select the item to be adjusted.

Display	Description
LSU Out Top	Leading edge registration adjustment
LSU Out Left	Center line adjustment

Adjustment: [LSU Out Top]
1. Press the system menu key.
2. Press the start key to output a test pattern.
3. Press the system menu key.
4. Select the item to be adjusted.

Display	Description	Setting range	Initial setting	Change in value per step
Top	Standard value	0 to 1180	600	1dot
MPT	Paper feed from MP tray	-70 to 70	0	1dot
Cassette	Paper feed from cassette	-70 to 70	0	1dot
Duplex	Duplex mode (second)	-70 to 70	0	1dot

5. Change the setting value using the cursor left/rigrt keys or numeric keys.
   For output example 1, increase the value. For output example 2, decrease the value.

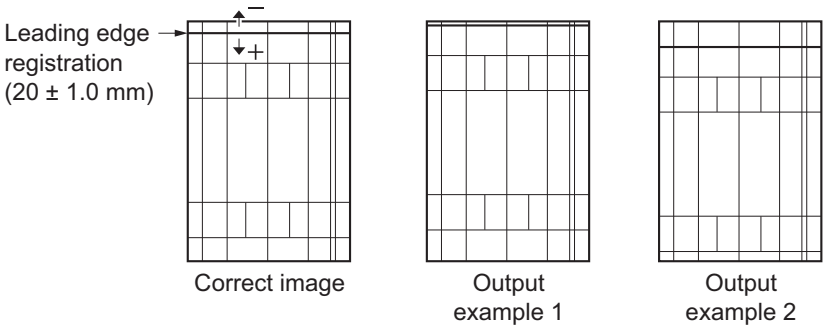

Figure 1-3-2

6. Press the start key. The value is set.

Item No.	Description
U034	

Caution

Check the copy image after the adjustment. If the image is still incorrect, perform the following adjustments in maintenance mode.

U034 → U066 (P.1-3-20) → U071 (P.1-3-24)

Adjustment: [LSU Out Left]

1. Press the system menu key.
2. Press the start key to output a test pattern.
3. Press the system menu key.
4. Select the item to be adjusted.

Display	Description	Setting range	Initial setting	Change in value per step
Left	Standard value	0 to 1180	600	1 dot
MPT	Paper feed from MP tray	-70 to 70	0	1 dot
Cassette1	Paper feed from optional cassette1	-70 to 70	0	1 dot
Cassette2	Paper feed from optional cassette2	-70 to 70	0	1 dot
Cassette3	Paper feed from optional cassette3	-70 to 70	0	1 dot
Duplex	Duplex mode (second)	-70 to 70	0	1 dot

5. Change the setting value using the cursor left/rigrt keys or numeric keys.
   For output example 1, increase the value. For output example 2, decrease the value.

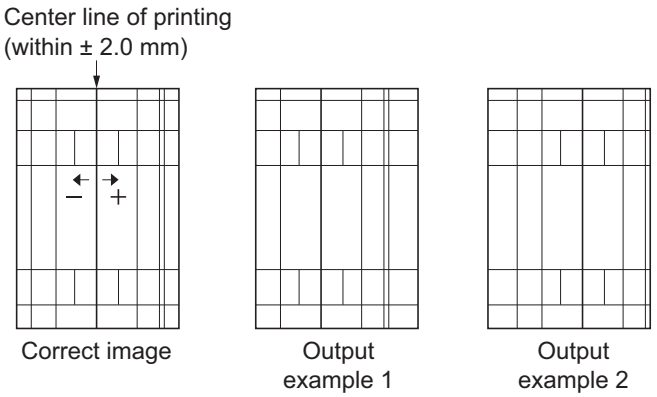

Figure 1-3-3

6. Press the start key. The value is set.

Caution

Check the copy image after the adjustment. If the image is still incorrect, perform the following adjustments in maintenance mode.

U034 → U067 (P.1-3-21) → U072 (P.1-3-26)

Completion

Press the stop key. The screen for selecting a maintenance item No. is displayed.

Item No.	Description
U065	**Adjust Scanner Motor Speed**

Description
Adjusts the magnification of the original scanning.
Purpose
Make the adjustment if the magnification in the main scanning direction is incorrect.
Make the adjustment if the magnification in the auxiliary scanning direction is incorrect.

Method
1. Press the start key.
2. Press the system menu key.
3. Place an original and press the start key to make a test copy.
4. Press the system menu key.
5. Select the item to be adjusted.

Display	Description	Setting range	Initial setting	Change in value per step
Main Scan	Scanner magnification in the main scanning direction	-32 to 127	0	0.1 %
Sub Scan	Scanner magnification in the auxiliary scanning direction	-25 to 25	0	0.1 %

Adjustment: [Main Scan]
1. Change the setting value using the cursor left/rigrt keys or numeric keys.
   For copy example 1, increase the value. For copy example 2, decrease the value.
   Increasing the setting enlarges the image and decreasing it narrows the image.

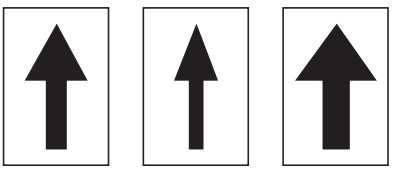

Figure 1-3-4

2. Press the start key. The value is set.

Item No.	Description
U065	**Adjustment: [Sub Scan]** 1. Change the setting value using the left/rigrt keys or numeric keys. For copy example 1, increase the value. For copy example 2, decrease the value. Increasing the value makes the image longer, while decreasing the value makes the image shorter. 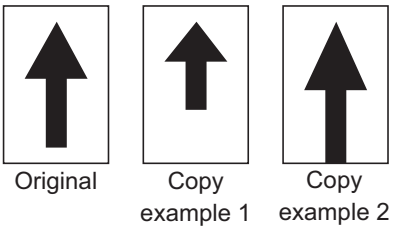 **Figure 1-3-5** 2. Press the start key. The value is set. **Completion** Press the stop key. The screen for selecting a maintenance item No. is displayed.

Item No.	Description
U066	**Adjust Table Leading Edge Timing**

Description
Adjusts the scanner leading edge registration of the original scanning.
Purpose
Make the adjustment if there is a regular error between the leading edges of the copy image and original.

Adjustment
1. Press the start key.
2. Press the system menu key.
3. Place an original and press the start key to make a test copy.
4. Press the system menu key.
5. Select the item to be adjusted.

Display	Description	Setting range	Initial setting	Change in value per step
Front	Scanner leading edge registration	-45 to 45	0	0.091 mm
Rotate	Scanner leading edge registration (rotate copying)	-45 to 45	0	0.100 mm

6. Change the setting value using the cursor left/right keys or numeric keys.
   For copy example 1, increase the value. For copy example 2, decrease the value.
   Increasing the value moves the image forward and decreasing the value moves the image backward.

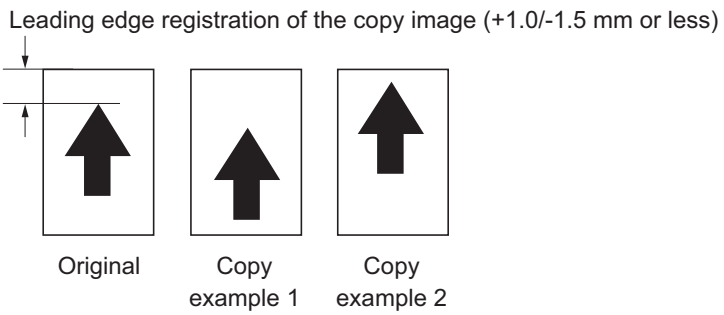

Figure 1-3-6

7. Press the start key. The value is set.

Caution
If the above adjustment does not optimize the leading edge registration, proceed with the following maintenance modes.

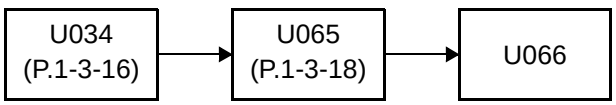

Completion
Press the stop key. The screen for selecting a maintenance item No. is displayed.

Item No.	Description
U067	**Adjust Table Center**

Description
Adjusts the scanner center line of the original scanning.
Purpose
Make the adjustment if there is a regular error between the center lines of the copy image and original.

Adjustment
1. Press the start key.
2. Press the system menu key.
3. Place an original and press the start key to make a test copy.
4. Press the system menu key.
5. Select the item to be adjusted.

Display	Description	Setting range	Initial setting	Change in value per step
Front	Scanner center line	-40 to 40	0	0.085 mm
Rotate	Scanner center line (rotate copying)	-40 to 40	0	0.100 mm

6. Change the setting value using the cursor left/right keys or numeric keys.
   For copy example 1, decrease the value. For copy example 2, increase the value.
   Increasing the value moves the image leftward and decreasing it moves the image rightward.

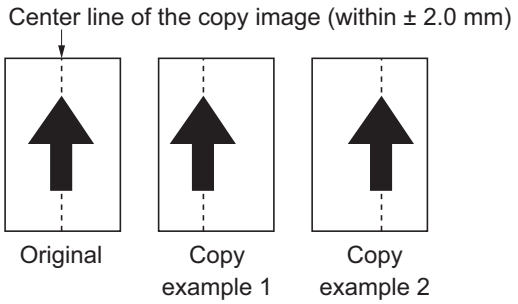

Figure 1-3-7

7. Press the start key. The value is set.

Caution
If the above adjustment does not optimize the center line, proceed with the following maintenance modes.

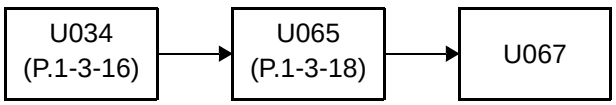

Completion
Press the stop key. The screen for selecting a maintenance item No. is displayed.

Item No.	Description
U068	**Adjust DP Scan Position** **Description** Adjusts the position for scanning originals from the DP. Performs the test copy at the four scanning positions after adjusting. **Purpose** Used when the image fogging occurs because the scanning position is not proper when the DP is used. Run U071 to adjust the timing of DP leading edge when the scanning position is changed. **Setting** 1. Press the start key.l

Display	Description	Setting range	Initial setting	Change in value per step
DP Read	Starting position adjustment for scanning originals	-33 to 33	0	0.086 mm
Black Line	Scanning position for the test copy originals	0 to 3	0	0.22 mm

2. Select [DP Read].
3. Change the setting using the cursor left/right keys or numeric keys.
   When the setting value is increased, the scanning position moves to the right and it moves to the left when the setting value is decreased.
4. Press the start key. The value is set.
5. Select [Black Line].
6. Change the setting using the left/right keys or numeric keys.
7. Press the start key. The value is set.
8. Set the original (the one which density is known) in the DP and press the system menu key.
9. Press the start key. Test copy is executed.
10. Perform the test copy at each scanning position with the setting value from 0 to 3 and check that no black line appears and the image is normally scanned.

Completion
Press the stop key. The screen for selecting a maintenance item No. is displayed.

Item No.	Description
U070	**Adjust DP Motor Speed**

Description
Adjusts the DP original scanning speed.
Purpose
Make the adjustment if the magnification is incorrect in the auxiliary scanning direction when the DP is used.

Adjustment
1. Press the start key.
2. Press the system menu key.
3. Place an original on the DP and press the start key to make a test copy.
4. Press the system menu key.
5. Select [Convey Speed].

Display	Description	Setting range	Initial setting	Change in value per step
Convey Speed	Magnification in the auxiliary scanning direction of CCD (first side)	-25 to 25	0	0.1 %

6. Change the setting value using the cursor left/right keys or numeric keys.
   For copy example 1, increase the value. For copy example 2, decrease the value.
   Increasing the value makes the image longer, while decreasing the value makes the image shorter.

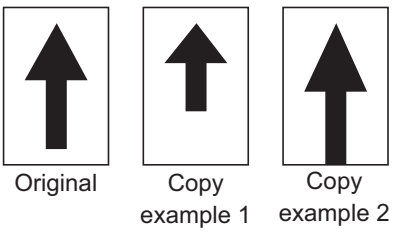

Figure 1-3-8

7. Press the start key. The value is set.

Completion
Press the stop key. The screen for selecting a maintenance item No. is displayed.

Item No.	Description
U071	**Adjust DP Leading Edge Timing** **Description** Adjusts the DP original scanning timing. **Purpose** Make the adjustment if there is a regular error between the leading or trailing edges of the original and the copy image when the DP is used. **Method** 1. Press the start key. 2. Press the system menu key. 3. Place an original on the DP and press the start key to make a test copy. 4. Press the system menu key. 5. Select the item to be adjusted.l

Display	Description	Setting range	Initial setting	Change in value per step
Front Head	Leading edge registration of CCD (first side)	-32 to 32	0	0.196 mm
Front Tail	Trailing edge registration of CCD (first side)	-32 to 32	0	0.196 mm
Back Head	Leading edge registration of CCD (second side)	-45 to 45	0	0.196 mm
Back Tail	Trailing edge registration of CCD (second side)	-45 to 45	0	0.196 mm
Rotate	Leading edge registration (rotate copying)	-128 to 127	0	0.196 mm

Item No.	Description
U071	**Adjustment: Leading edge registration** 1. Change the setting value using the cursor left/right keys or numeric keys. For copy example 1, increase the value. For copy example 2, decrease the value. Increasing the value moves the image forward and decreasing the value moves the image backward. 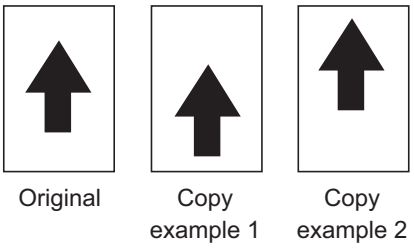 **Figure 1-3-9** 2. Press the start key. The value is set. **Caution** If the first side is adjusted, check the second side and if adjustment is required, carry out the adjustment. If the above adjustment does not optimize the leading edge registration, proceed with the following maintenance modes. 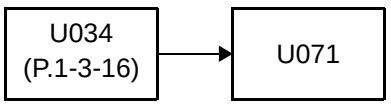 **Adjustment: Trailing edge registration** 1. Change the setting value using the cursor left/right keys or numeric keys. For copy example 1, increase the value. For copy example 2, decrease the value. 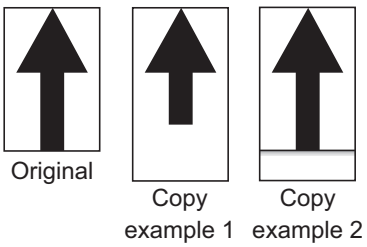 **Figure 1-3-10** 2. Press the start key. The value is set. **Caution** If the first side is adjusted, check the second side and if adjustment is required, carry out the adjustment. **Completion** Press the stop key. The screen for selecting a maintenance item No. is displayed.

Item No.	Description
U072	**Adjust DP Original Center**

Description
Adjusts the scanning start position for the DP original.
Purpose
Make the adjustment if there is a regular error between the centers of the original and the copy image when the DP is used.

Adjustment
1. Press the start key.
2. Press the system menu key.
3. Place an original on the DP and press the start key to make a test copy.
4. Press the system menu key.
5. Select the item to be adjusted.l

Display	Description	Setting range	Initial setting	Change in value per step
Front	DP center line (first side)	-39 to 39	0	0.085 mm
Back	DP center line (second side)	-39 to 39	12	0.085 mm
Rotate	DP center line (rotate copying)	-39 to 39	0	0.085 mm

6. Change the setting value using the cursor left/right keys or numeric keys.
   For copy example 1, increase the value. For copy example 2, decrease the value.
   Increasing the value moves the image rightward and decreasing it moves the image leftward.

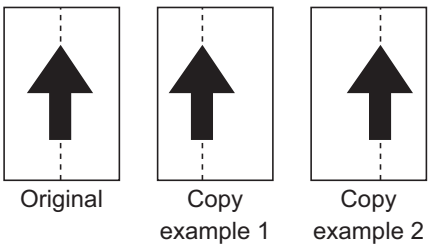

Figure 1-3-11

7. Press the start key. The value is set.

Caution
If the first side is adjusted, check the second side and if adjustment is required, carry out the adjustment.
If the above adjustment does not optimize the center line, proceed with the following maintenance modes.

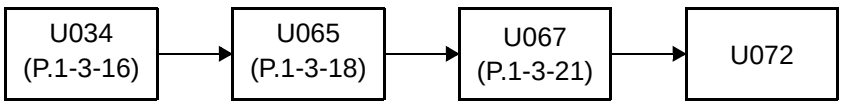

Completion
Press the stop key. The screen for selecting a maintenance item No. is displayed.

Item No.	Description
U203	**Checking DP operation** **Description** Simulates the original conveying operation separately in the DP. **Purpose** To check the DP operation. **Method** 1. Press the start key. 2. Place an original in the DP if running this simulation with paper. 3. Select the speed to be operated. **Display** / **Description** Normal Speed — Normal reading (600 dpi) High Speed — High-speed reading 4. Press the start key. 5. Select the item to be operated. **Display** / **Description** CCD ADP — With paper, single-sided original of CCD CCD RADP — With paper, double-sided original of CCD CCD ADP (Non-P) — Without paper, single-sided original of CCD (continuous operation) CCD RADP (Non-P) — Without paper, double-sided original of CCD (continuous operation) 6. Press the start key. The operation starts. 7. To stop continuous operation, press the stop key. **Completion** Press the stop key. The screen for selecting a maintenance item No. is displayed.

<table>
<tr><th>Item No.</th><th>Description</th></tr>
<tr><td>U222</td><td>

Setting the IC card type

Description
Sets the type of IC card.
Purpose
To change the type of IC card.

Setting
1. Press the start key.
2. Select the item.

Display	Description
Other	The type of IC card is SSFC.
SSFC	The type of IC card is not SSFC.

* : Initial setting: Other

3. Press the start key. The setting is set.

Completion
Press the stop key. The screen for selecting a maintenance item No. is displayed.

</td></tr>
<tr><td>U250</td><td>

Setting the maintenance cycle

Description
Displays, clears and changes the maintenance cycle.
Purpose
To check and change the maintenance cycle.

Method
1. Press the start key. The currently set maintenance cycle is displayed.

Setting
1. Select [M.Cnt A].
2. Change the setting using the cursor left/right keys or numeric keys.

Description	Setting range	Initial setting
Maintenance cycle	0 to 9999999	200000

3. Press the start key. The value is set.

Clearing
1. Select [Clear].
2. Press the start key. The count is cleared.

Completion
Press the stop key. The screen for selecting a maintenance item No. is displayed.

</td></tr>
</table>

Item No.	Description
U251	**Checking/clearing the maintenance count** **Description** Displays, clears and changes the maintenance count. **Purpose** To check the maintenance count. Also to clear the count during maintenance service (replacing the maintenance kit). **Method** 1. Press the start key. The maintenance count is displayed. **Setting** 1. Select [M.Cnt A]. 2. Change the setting using the cursor left/right keys or numeric keys. **Description** | **Setting range** | **Initial setting** Maintenance count | 0 to 9999999 | 0 3. Press the start key. The count is set. **Clearing** 1. Select [Clear]. 2. Press the start key. The count is cleared. **Completion** Press the stop key. The screen for selecting a maintenance item No. is displayed.

Item No.	Description
U252	**Setting the destination** **Description** Switches the operations and screens of the machine according to the destination. **Purpose** To be executed after initializing the backup RAM, in order to return the setting to the value before replacement or initialization. **Setting** 1. Press the start key. 2. Select the destination. **Display** / **Description** Inch — Inch (North America) specifications Europe Metric — Metric (Europe) specifications Asia Pacific — Metric (Asia Pacific) specifications Australia — Australia specifications China — China specifications Korea — Korea specifications 3. Press the start key. 4. Turn the main power switch off and on. **Supplement** The specified initial settings are provided according to the destinations in the maintenance items below. To change the initial settings in those items, be sure to run maintenance item U021 after changing the destination.

<table>
<tr><th>Item No.</th><th>Description</th></tr>
<tr><td>U253</td><td>

Switching between double and single counts

Description
Switches the count system for the total counter and other counters.
Purpose
Used to select, according to the preference of the user (copy service provider), if folio size paper is to be counted as one sheet (single count) or two sheets (double count).

Setting
1. Press the start key.
2. Select the item to set.

Display	Description
Color	Count system of color mode
B/W	Count system of black/white mode

3. Press the start key.
4. Select the count system using the cursor up/down keys.

Display	Description
SGL (All)	Single count for all size paper
DBL (Folio)	Double count for Folio size or larger

* : Initial setting: DBL Count(Folio)
5. Press the start key. The setting is set.

Completion
Press the stop key. The screen for selecting a maintenance item No. is displayed.

</td></tr>
<tr><td>U260</td><td>

Selecting the timing for copy counting

Description
Changes the copy count timing for the total counter and other counters.
Purpose
To be set according to user request.

Setting
1. Press the start key.
2. Select the copy count timing.

Display	Description
Feed	When secondary paper feed starts
Eject	When the paper is ejected

* : Initial setting: Eject
3. Press the start key. The setting is set.

Completion
Press the stop key. The screen for selecting a maintenance item No. is displayed.

</td></tr>
</table>

Item No.	Description
U285	**Setting service status page** **Description** Determines displaying the print coverage report on reporting. **Purpose** According to user request, changes the setting. **Setting** 1. Press the start key. 2. Select On or Off. **Display** / **Description** On / Displays the print coverage Off / Not to display the print coverage * : Initial setting: On 3. Press the start key. The setting is set. **Completion** Press the stop key. The screen for selecting a maintenance item No. is displayed.

Item No.	Description
U332	**Setting the size conversion factor** **Description** **Rate:** Setting a factor to convert a non-standard size paper to A4/Letter. The coefficient set here is used to convert the black ratio in relation to the A4/Letter size and to display the result in user simulation. **Mode:** Make settings on the color copy and color print coverage counter displays, as well as the coverage threshold. **Method** 1. Press the start key. 2. Select the item to set. **Display** / **Description** Rate — Size coefficient Mode — Toggling full-color count and color coverage count display Level 1 — Low coverage threshold value Level 2 — Middle coverage threshold value **Setting: [Rate]** **Purpose:** To set the coefficient for converting the black ratio for nonstandard sizes in relation to the A4/Letter size. 1. Change the setting using the +/-keys or numeric keys. **Display** / **Description** / **Setting range** / **Initial setting** Rate / Size coefficient / 0.1 to 3.0 / 1.0 2. Press the start key. The value is set. **Setting: [Mode]** **Purpose:** Make settings on the color copy and color print color/coverage counter displays. 1. Select the mode. **Display** / **Description** 0 — Full-color count display 1 — Color coverage count display Initial setting: 0 * : If ‘0’ has been changed to ‘1’, revert the U260 feed/eject counter switch to its initial state (Eject). 2. Press the start key. The setting is set. **Setting: [Level 1/2]** **Purpose:** Setting the coverage thresholds to segment the color count depending on the density level of 1, 2, and 3, for the counters of color copying and color printing. * : The coverage threshold will be used to categorize the following counters when using U920. Color Copy(H), Color Copy(M), Color Copy(L) Color Prn(H), Color Prn(M), Color Prn(L)

<table>
<tr><th>Item No.</th><th>Description</th></tr>
<tr><td>U332</td><td>
1. Select the item.
2. Change the setting using the +/-keys or numeric keys.
<table>
<tr><th>Display</th><th>Description</th><th>Setting range</th><th>Initial setting</th></tr>
<tr><td>Level 1</td><td>Low coverage threshold value</td><td>0.1 to 99.8</td><td>1.0</td></tr>
<tr><td>Level 2</td><td>Middle coverage threshold value</td><td>0.2 to 99.9</td><td>2.5</td></tr>
</table>
3. Press the start key. The value is set.

Completion
Press the stop key.
* : The screen for selecting a maintenance item No. is displayed.
</td></tr>
<tr><td>U345</td><td>
Setting the value for maintenance due indication

Description
Sets when to display a message notifying that the time for maintenance is about to be reached, by setting the number of copies that can be made before the current maintenance cycle ends. When the difference between the number of copies of the maintenance cycle and that of the maintenance count reaches the set value, the message is displayed.
Purpose
To change the time for maintenance due indication.

Setting
1. Press the start key.
2. Select [Cnt].
3. Change the setting using the cursor left/right keys.
<table>
<tr><th>Description</th><th>Setting range</th><th>Initial setting</th></tr>
<tr><td>Time for maintenance due indication
(Remaining number of copies that can be made before the current maintenance cycle ends)</td><td>0 to 9999</td><td>0</td></tr>
</table>
4. Press the start key. The value is set.

Clearing
1. Select [Clear].
2. Press the start key. The value is cleared.

Completion
Press the stop key. The screen for selecting a maintenance item No. is displayed.
</td></tr>
</table>

Item No.	Description
U346	**Selecting Sleep Mode** **Description** Switches configurations for sleep modes. **Purpose** Use this to switch configurations for sleep modes. **Method** 1. Press the start key. 2. Select the item to set. **Setting** 1. Press the start key. 2. Select On or Off. Initial setting: On 3. Press the start key. The setting is set. **Completion** Press the stop key. * : The screen for selecting a maintenance item No. is displayed.

Display	Description
Timer/Sleep Level	Undisplayed setting of BAM conformity Timer change and Sleep Level
Auto Sleep	On/Off setting of an Auto Sleep function

Display	Description
On	On setting
Off	Off setting

Item No.	Description
U402	**Adjust Print Margin**

Description
Adjusts margins for image printing.
Purpose
Make the adjustment if margins are incorrect.

Adjustment
1. Press the start key.
2. Press the system menu key.
3. Press the start key to output a test pattern.
4. Press the system menu key.
5. Select the item to be adjusted.

Display	Description	Setting range	Initial setting	Change in value per step
Lead	Printer leading edge margin	0.0 to 10.0	4.0	-
A Margin	Printer left margin	0.0 to 10.0	4.0	-
C Margin	Printer right margin	0.0 to 10.0	4.0	-
Trail	Printer trailing edge margin	0.0 to 10.0	4.0	-

6. Change the setting value using the cursol left/right keys or numeric keys.
   Increasing the value makes the margin wider, and decreasing it makes the margin narrower.

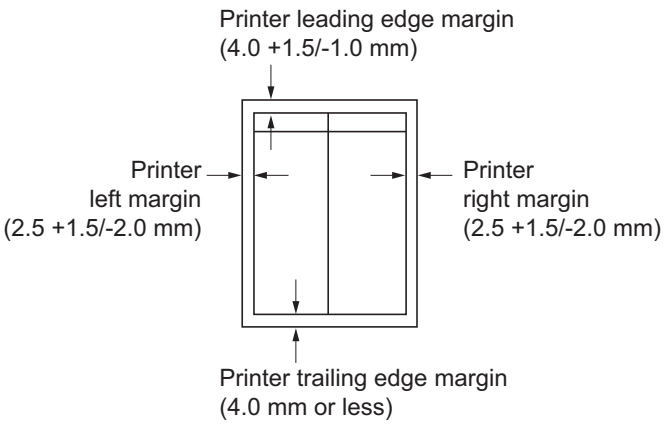

Figure 1-3-12

7. Press the start key. The value is set.

Caution
If the above adjustment does not optimize the margins, perform the following maintenance modes.

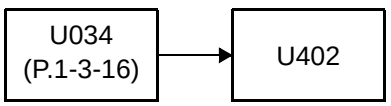

Completion
Press the stop key. The screen for selecting a maintenance item No. is displayed.

Item No.	Description
U403	**Adjust Scanning Margin(Table)**

Description
Adjusts margins for scanning the original on the contact glass.
Purpose
Make the adjustment if margins are incorrect.

Adjustment
1. Press the start key.
2. Press the system menu key.
3. Place an original and press the start key to make a test copy.
4. Press the system menu key.
5. Select the item to be adjusted.

Display	Description	Setting range	Initial setting	Change in value per step
A Margin	Scanner left margin	0.0 to 10.0	2.0	0.5 mm
B Margin	Scanner leading edge margin	0.0 to 10.0	2.0	0.5 mm
C Margin	Scanner right margin	0.0 to 10.0	2.0	0.5 mm
D Margin	Scanner trailing edge margin	0.0 to 10.0	2.0	0.5 mm

6. Change the setting value using the cursor left/right keys or numeric keys.
   Increasing the value makes the margin wider, and decreasing it makes the margin narrower.

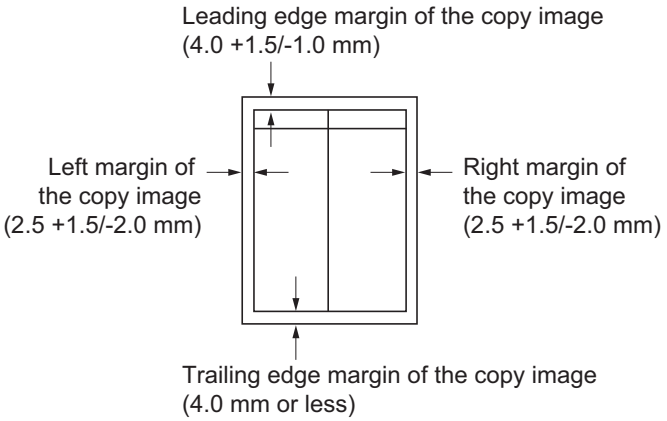

Figure 1-3-13

7. Press the start key. The value is set.

Caution
If the above adjustment does not optimize the margins, perform the following maintenance modes.

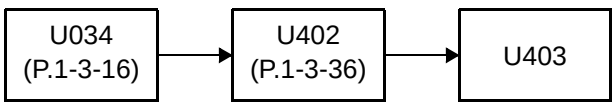

Completion
Press the stop key. The indication for selecting a maintenance item No. appears.

Item No.	Description
U404	**Adjust Scanning Margin(DP)**

Description
Adjusts margins for scanning the original from the DP.
Purpose
Make the adjustment if margins are incorrect.

Adjustment
1. Press the start key.
2. Press the system menu key.
3. Place an original on the DP and press the start key to make a test copy.
4. Press the system menu key.
5. Select the item to be adjusted.

Display	Description	Setting range	Initial setting	Change in value per step
A Margin	DP left margin	0.0 to 10.0	3.0	0.5 mm
B Margin	DP leading edge margin	0.0 to 10.0	2.5	0.5 mm
C Margin	DP right margin	0.0 to 10.0	3.0	0.5 mm
D Margin	DP trailing edge margin	0.0 to 10.0	4.0	0.5 mm

6. Change the setting value using the cursor left/right keys or numeric keys.
   Increasing the value makes the margin wider, and decreasing it makes the margin narrower.

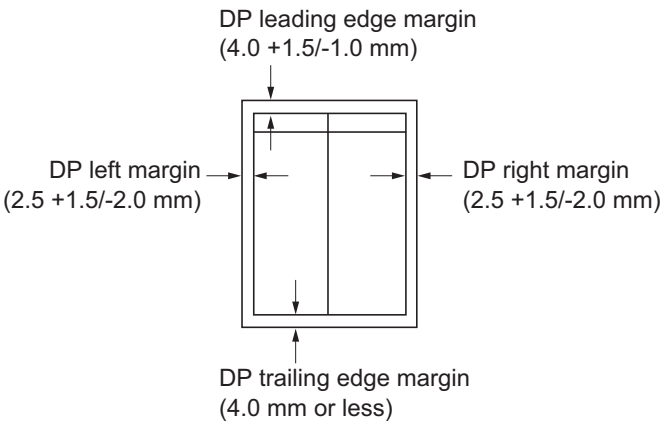

Figure 1-3-14

7. Press the start key. The value is set.

Caution
If the above adjustment does not optimize the margins, perform the following maintenance modes.

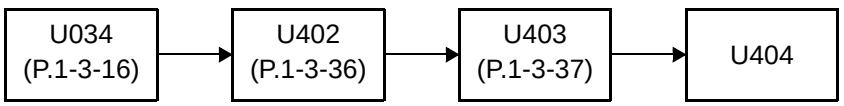

Completion
Press the stop key. The screen for selecting a maintenance item No. is displayed.

Item No.	Description
U410	**Adjusting the halftone automatically** **Description** Carries out processing for the data acquisition that is required in order to perform either automatic adjustment of the halftone or the ID correction operation. **Purpose** Performed when the quality of reproduced halftones has dropped. **Method** 1. Press the start key. 2. Select [Normal Mode]. 3. Press the start key. A test patterns 1 and 2 are outputted. 4. Place the output test pattern 1 as the original. Place approximately 20 sheets of white paper on the test pattern 1 and set them. 5. Press the start key. Adjustment is made (first time). 6. Place the output test pattern 2 as the original. Place approximately 20 sheets of white paper on the test pattern 2 and set them. 7. Press the start key. Adjustment is made (second time). 8. When normally completed, [Finish] is displayed. If a problem occurs during auto adjustment, error code is displayed. **Error codes** **Completion** Press the stop key. The screen for selecting a maintenance item is displayed.

Codes	Description	Codes	Description
S001	Patch not detected	E001	Engine status error
S002	Original deviation in the main scanning direction	E002	Engine sensor error
		EFFF	Engine other error
S003	Original deviation in the auxiliary scanning direction	C001	Controller error
		C100	Adjustment value error
S004	Original inclination error	C200	Adjustment value error
S005	Original type error	CFFF	Controller other error
SFFF	Scanner other error		

Item No.	Description
U411	**Auto Adj Scn** **Description** Uses a specified original and automatically adjusts the following items in the scanner and the DP scanning sections. Scanner section: Original size magnification, leading edge timing, center line, input gamma, input gamma in monochrome mode and matrix. DP scanning section: Original size magnification, leading edge timing, center line. **Purpose** To perform automatic adjustment of various items in the scanner and the DP scanning sections. **Method** 1. Press the start key. 2. Select the item. The screen for executing is displayed.

Display	Description	Original to be used for adjustment (P/N)
Table	Automatic adjustment in the scanner section. Original size magnification, leading edge timing, center line, input gamma, input gamma in monochrome mode and matrix.	302NM94340 
DP	Automatic adjustment in the DP scanning section. Original size magnification, leading edge timing, center line.	302NM94330 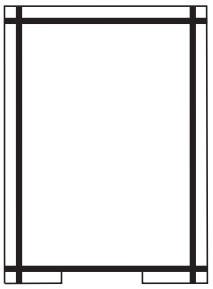
All	Performs automatic adjustment in the DP scanning section following automatic adjustment in the scanner section.	302NM94340 302NM94330
Target	Set-up for obtaining the target value	302NM94340 302NM94330

Item No.	Description
U411	**Method: Table** **To Automaticary enter the target value** : Usually, it adjusts here. 1. Set a specified original (P/N: 302NM94340) on the platen. 2. Enter maintenance item U411. 3. Select [Target]. 4. Select [Auto] and press the start key. 5. Select [Table]. 6. Press the start key. Auto adjustment starts. **To manually enter the target value** : When adjustment is automatically impossible. 1. Enter the target values which are shown on the specified original (P/N: 302NM94340) executing maintenance item U425. 2. Set a specified original (P/N: 302NM94340) on the platen. 3. Enter maintenance item U411. 4. Select [Target]. 5. Select [U425] and press the start key. 6. Select [Table]. 7. Press the start key. Auto adjustment starts. **Method: DP** 1. Set a specified original (P/N: 302NM94330) on the DP face up. 2. Enter maintenance item U411. 3. Select [DP]. 4. Press the start key. Auto adjustment starts. * : When automatic adjustment has normally completed, [OK] is displayed. If a problem occurs during auto adjustment, error code is displayed and operation stops. Should this happen, determine the details of the problem and repeat the procedure from the beginning. **Error Codes** **Codes** / **Description** 00 / Automatic adjustment success 01 / Black band detection error (scanner auxiliary scanning direction leading edge skew) 02 / Black band detection error (scanner main scanning direction far end skew) 03 / Black band detection error (scanner main scanning direction near end skew) 03 / Black band detection error (scanner auxiliary scanning direction trailing edge skew) 04 / Black band is not detected (scanner auxiliary scanning direction leading edge) 05 / Black band is not detected (scanner main scanning direction far end)

Item No.	Description
U411	**Error Codes**

Codes	Description
06	Black band is not detected (scanner main scanning direction near end)
07	Black band is not detected (scanner auxiliary scanning direction trailing edge)
08	Black band is not detected (DP main scanning direction far end)
09	Black band is not detected (DP main scanning direction near end)
0a	Black band is not detected (DP auxiliary scanning direction leading edge)
0b	Black band is not detected (DP auxiliary scanning direction leading edge original check)
0c	Black band is not detected (DP auxiliary scanning direction trailing edge)
0d	White band is not detected (DP auxiliary scanning direction trailing edge)
0e	DMA time out
0f	Auxiliary scanning direction magnification error
10	Auxiliary scanning direction leading edge error
11	Auxiliary scanning direction trailing edge error
12	DP uxiliary scanning direction skew error
13	Maintenance request error
14	Main scanning direction center line error
15	DP main scanning direction skew error
16	Main scanning direction magnification error
17	Service call error
18	DP paper misfeed error
19	PWB replacement error
1a	Original error
1b	Input gamma adjustment original error
1c	Matrix adjustment original error
1d	Original for the white reference compensation coefficient error
1e	Lab value searching error
1f	Lab value comparing error
20	Input gamma correction coefficient error
21	Color correction matrix coefficient error
30	Chromatic aberration adjustment original error
63	Completed to obtain a test RAW

Completion

Press the stop key. The screen for selecting a maintenance item is displayed.

Item No.	Description
U425	**Set Target** **Description** Enters the lab values that is indicated on the back of the chart (P/N: 302NM94340) used for adjustment. **Purpose** Performs data input in order to correct for differences in originals during automatic adjustment. **Method** 1. Press the start key. 2. Select the item to be set

Display	Description
Table	Setting the value of the table adjustment.
DP	Setting the value of DP adjustment.

Method: Table

1. Press the start key.
2. Select the item to be set..

Display	Description
White	Setting the white patch for the original for adjustment
Black	Setting the black patch for the original for adjustment
Gray1	Setting the Gray1 patch for the original for adjustment
Gray2	Setting the Gray2 patch for the original for adjustment
Gray3	Setting the Gray3 patch for the original for adjustment
C	Setting the cyan patch for the original for adjustment
M	Setting the magenta patch for the original for adjustment
Y	Setting the yellow patch for the original for adjustment
R	Setting the red patch for the original for adjustment
G	Setting the green patch for the original for adjustment
B	Setting the blue patch for the original for adjustment
Adjust Original	Setting the main and auxiliary scanning directions

3. Select the item to be set.

Display	Description	Setting range	Initial setting
L	Setting the L value	0.0 to 100.0	93.6/10.6/76.2/25.2/51.3 72.6/48.1/86.2/46.7/67.8/38.8
a	Setting the a value	-200.0 to 200.0	0.9/-0.2/-0.2/-0.2/-0.3 -32.8/69.9/-18.6/54.2/-51.3/25.3
b	Setting the b value	-200.0 to 200.0	-0.4/-0.7/1.2/-0.2/0.3 -11.5/-6.1/81.7/38.6/48.9/-22.8

4. Enters the value that is indicated on the back of the chart using the cursor right/left keys or numeric keys.
5. Press the start key. The value is set.

Item No.	Description
U425	**Setting: [Adjust Original] *:** This setting is usually unnecessary.

Display	Description	Setting range	Initial setting
Dist1	Sets the adjustment value of a leading edge.	4.0 to 6.0	5.0
Dist2	Sets the adjustment value of a left edge.	9.0 to 11.0	10.0
Dist3	Sets the adjustment value of a trailing edge.	265.0 to 267.0	266.0

1. Measure the distance from the leading edge to the top of black belt 1 of the original at A, B and C.
   Measurement procedure
   1) Measure the distance from the leading edge to the top of black belt 1 of the original at A (30 mm from the left edge), B (105 mm from the left edge) and C (180 mm from the left edge), respectively.
   2) Apply the following formula for the values obtained: ((A + B + C) / 3)
2. Enter the values solved using the cursor right/left keys or numeric keys in [Dist1].
3. Press the start key. The value is set.
4. Measure the distance from the left edge to the right edge black belt 2 of the original at F.
   Measurement procedure
   1) Measure the distance from the left edge to the right edge black belt 2 of the original at F (21 mm from the top edge of black belt 1).
5. Enter the values using the cursor right/left keys or numeric keys in [Dist2].
6. Press the start key. The value is set.
7. Measure the distance from the top edge of black belt 1 to the bottom of black belt 3 of the original at D and E.
   1) Measure the distance from the top edge of black belt 1 to the bottom of black belt 3 of the original at D (30 mm from the left edge) and E (180 mm from the left edge), respectively.
   2) Apply the following formula for the values obtained: (D/2 + E/2)
8. Enter the measured value using the cursor right/left keys or numeric keys in [Dist3].

Press the start key. The value is set.

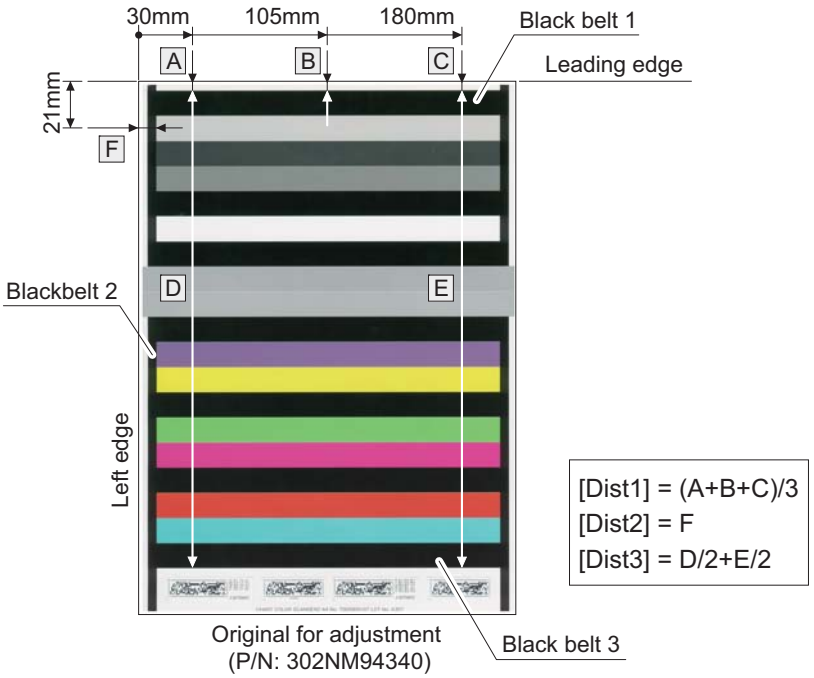

Figure 1-3-15

Item No.	Description
U425	**Setting: [DP] *:** This setting is usually unnecessary.

Display	Description	Setting range	Initial setting
Lead	A value of length of detecting the leading edge.	14.0 to 16.0	15.0
Main Scan	A value of width of main scan.	14.0 to 16.0	15.0
Sub Scan	A value of length of sub scan.	265.0 to 269.0	267.0

1. Measure the distance from the leading edge to the black belt (inside) of the original at A.
2. Enter the measured value using the cursor right/left keys or numeric keys in [Lead].
3. Measure the distance from the left edge to the black belt (inside) of the original at B.
4. Enter the measured value using the cursor right/left keys or numeric keys in [Main Scan].
5. Measure the distance from the black belt of leading edge (inside) to the black belt of trailing edge (inside) of the original at C.
6. Enter the measured value using the cursor right/left keys or numeric keys in [Sub Scan].
7. Press the start key. The value is set.

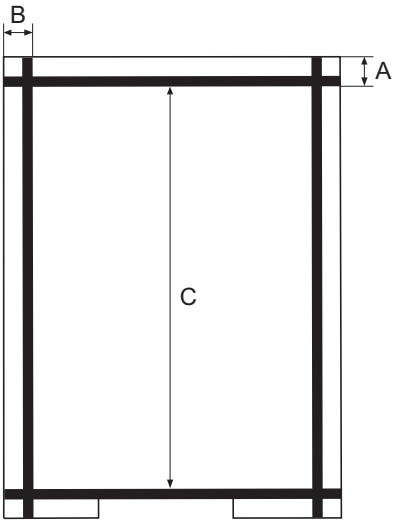

Original for adjustment (P/N: 302NM94330)

Figure 1-3-16

Completion

Press the stop key. The screen for selecting a maintenance item No. is displayed.

Item No.	Description
U600	**Initializing all data**

Description
Initializes software switches and all data in the backup data on the FAX control PWB, according to the destination and OEM.
Executes the check of the file system, when abnormality of the file system is detected, initializes the file system, communication past record and register setting contents.

Purpose
To initialize the FAX control PWB.

Method

1. Press the start key.
   The screen for entering the destination code and OEM code is displayed.
2. Select [Country Code] and enter a destination code using the numeric keys (refer to the destination code list on following for the destination code).
   * : OEM code is no operation necessary.
3. Select [Execute] and press the start key. Data initialization starts. To cancel data initialization, press the stop key.
4. After data initialization, the entered destination, OEM codes and ROM version are displayed. A ROM version displays three kinds, application, boot, and IPL.

Destination code list

Code	Destination	Code	Destination
000	Japan	250	Russia
007	Argentina	253	CTR21 (European nations)
009	Australia		Italy
022	Brazil		Germany
038	China		Spain
080	Hong Kong		U.K.
084	Indonesia		Netherlands
088	Israel		Sweden
097	Korea		France
108	Malaysia		Austria
115	Mexico		Switzerland
126	New Zealand		Belgium
136	Peru		Denmark
137	Philippines		Finland
152	Saudi Arabiat		Portugal
156	Singapore		Ireland
159	South Africa		Norway
169	Thailand	254	Taiwan
181	U.S.A.		

<table>
<tr><th>Item No.</th><th>Description</th></tr>
<tr><td>U601</td><td>

Initializing permanent data

Description
Initializes software switches on the FAX control PWB according to the destination and OEM.
Purpose
To initialize the FAX control PWB without changing user registration data.

Method
1. Press the start key.
   The screen for entering the destination code and OEM code is displayed.
2. Select [Country Code] and enter a destination code using the numeric keys (refer to the destination code list on page 1-3-46 for the destination code).
   * : OEM code is no operation necessary.
3. Select [Execute] and press the start key. Data initialization starts. To cancel data initialization, press the back key.
4. After data initialization, the entered destination, OEM codes and ROM version are displayed. A ROM version displays three kinds, application, boot, and IPL.

</td></tr>
<tr><td>U603</td><td>

Setting user data 1

Description
Makes user settings to enable the use of the machine as a fax.
Purpose
To be executed as required.

Method
1. Press the start key.
2. Select [Line Type] and press the start key.
3. Select the setting.

<table>
<tr><th>Display</th><th>Description</th></tr>
<tr><td>DTMF</td><td>DTMF</td></tr>
<tr><td>10PPS</td><td>10 PPS</td></tr>
<tr><td>20PPS</td><td>20 PPS</td></tr>
</table>

   * : Initial setting: DTMF
4. Press the start key. The setting is set.

Completion
Press the stop key. The screen for selecting a maintenance item No. is displayed.

</td></tr>
</table>

<table>
<tr><th>Item No.</th><th>Description</th></tr>
<tr><td>U604</td><td>

Setting user data 2

Description
Makes user settings to enable the use of the machine as a fax.
Purpose
Use this if the user wishes to adjust the number of rings that occur before the unit switches into fax receiving mode when fax/telephone auto-select is enabled.

Method
1. Press the start key.
2. Change the setting using the cursor left/right keys or numeric keys.

<table>
<tr><th>Description</th><th>Setting range</th><th>Initial setting</th></tr>
<tr><td>Number of fax/telephone rings</td><td>0 to 15</td><td>2 (120 V)/1 (220-240 V)</td></tr>
</table>

* : If you set this to 0, the unit will start fax reception without any ringing.

3. Press the start key. The value is set.

Completion
Press the stop key. The screen for selecting a maintenance item No. is displayed.

</td></tr>
<tr><td>U605</td><td>

Clearing data

Description
Initializes data related to the fax transmission such as transmission history.
Purpose
To clear the transmission history.

Method
1. Press the start key.
2. Select [Comm REC].
3. Press the start key. Initialization processing starts. When processing is finished, [Completed] is displayed.

Completion
Press the stop key. The screen for selecting a maintenance item No. is displayed.

</td></tr>
</table>

Item No.	Description
U610	**Setting system 1** **Description** Makes settings for fax reception regarding the sizes of the fax paper and received images and automatic printing of the protocol list. **Method** 1. Press the start key. 2. Select the item to be set. **Display** / **Description** Cut Line:100% — Sets the number of lines to be ignored when receiving a fax at 100% magnification. Cut Line:Auto — Sets the number of lines to be ignored when receiving a fax in the auto reduction mode. Cut Line:A4 — Sets the number of lines to be ignored when receiving a fax (A4R/LetterR) in the auto reduction mode. **Setting the number of lines to be ignored when receiving a fax at 100% magnification** Sets the maximum number of lines to be ignored if the received data volume exceeds the recording capacity when recording the data at 100% magnification. If the number of excess lines is below the setting, those lines are ignored. If over the setting, they are recorded on the next page. 1. Change the setting using the cursor left/right keys or numeric keys. **Description** / **Setting range** / **Initial setting** / **Change in value per step** Number of lines to be ignored when receiving at 100% / 0 to 22 / 3 / 16 lines * : Increase the setting if a blank second page is output, and decrease it if the received image does not include the entire transmitted data. 2. Press the start key. The value is set. **Setting the number of lines to be ignored when receiving a fax in the auto reduction mode** Sets the maximum number of lines to be ignored if the received data volume exceeds the recording capacity when the data is recorded in the auto reduction mode. If the number of excess lines is below the setting, those lines are ignored. If over the setting, the entire data on a page is further reduced so that it can be recorded on the same page. 1. Change the setting using the cursor left/right keys or numeric keys. **Description** / **Setting range** / **Initial setting** / **Change in value per step** Number of lines to be ignored when receiving in the auto reduction mode / 0 to 22 / 0 / 16 lines * : Increase the setting if a page received in the reduction mode is over-reduced and too much trailing edge margin is left. Decrease it if the received image does not include all transmitted data. 2. Press the start key. The value is set.

Item No.	Description
U610	**Setting the number of lines to be ignored when receiving a fax (A4R/LetterR) in the auto reduction mode** Sets the maximum number of lines to be ignored if the received data volume exceeds the recording capacity when the data is recorded in the auto reduction mode onto A4R or LetterR paper under the conditions below. If the number of excess lines is below the setting, those lines are ignored. If over the setting, the entire data on a page is further reduced so that it can be recorded on the same page. 1. Change the setting using the cursor left/right keys or numeric keys. **Description** / **Setting range** / **Initial setting** / **Change in value per step** Number of lines to be ignored when receiving a fax (A4R, letter) in the auto reduction mode / 0 to 22 / 0 / 16 lines * : Increase the setting if a page received in the reduction mode is over-reduced and too much trailing edge margin is left. Decrease it if the received image does not include all transmitted data. 2. Press the start key. The value is set. **Completion** Press the stop key. The screen for selecting a maintenance item No. is displayed.

Item No.	Description
U611	**Setting system 2** **Description** Sets the number of adjustment lines for automatic reduction. **Method** 1. Press the start key. 2. Select the item to be set. **Display** / **Description** Adj Lines — Sets the number of adjustment lines for automatic reduction. Adj Lines(A4) — Sets the number of adjustment lines for automatic reduction when A4 paper is set. Adj Lines(LT) — Sets the number of adjustment lines for automatic reduction when letter size paper is set. **Setting the number of adjustment lines for automatic reduction** Sets the number of adjustment lines for automatic reduction. 1. Change the setting using the cursor left/right keys or numeric keys. **Description** / **Setting range** / **Initial setting** Number of adjustment lines for automatic reduction — 0 to 22 — 7 2. Press the start key. The value is set. **Setting the number of adjustment lines for automatic reduction when A4 paper is set** Sets the number of adjustment lines for automatic reduction when A4 paper is set. 1. Change the setting using the cursor left/right keys or numeric keys. **Description** / **Setting range** / **Initial setting** Number of adjustment lines for automatic reduction when A4 paper is set — 0 to 22 — 22 2. Press the start key. The value is set. **Setting the number of adjustment lines for automatic reduction when letter size paper is set** Sets the number of adjustment lines for automatic reduction when letter size paper is set. 1. Change the setting using the cursor left/right keys or numeric keys. **Description** / **Setting range** / **Initial setting** Number of adjustment lines for automatic reduction when letter size paper is set — 0 to 26 — 26 2. Press the start key. The value is set. **Completion** Press the stop key. The screen for selecting a maintenance item No. is displayed.

Item No.	Description
U612	**Setting system 3** **Description** Makes settings for fax transmission regarding operation and automatic printing of the protocol list. This determines how trailing edge margin is detected (to prevent image from being mutilated) while printing a received Fax. **Method** 1. Press the start key. 2. Select the item to be set. **Display** / **Description** Auto Reduction — Selects if auto reduction in the auxiliary direction is to be performed. Protocol List — Sets the automatic printing of the protocol list. Detect Trail — Sets how trailing edge margins are detected **Selecting if auto reduction in the auxiliary direction is to be performed** Sets whether to receive a long document by automatically reducing it in the auxiliary direction or at 100% magnification. 1. Select the setting using the cursor left/right keys. **Display** / **Description** On — Auto reduction is performed if the received document is longer than the fax paper. Off — Auto reduction is not performed. * : Initial setting: On 2. Press the start key. The setting is set. **Setting the automatic printing of the protocol list** Sets if the protocol list is automatically printed out. 1. Select the setting using the cursor left/right keys. **Display** / **Description** On — The protocol list is automatically printed out after communication. Err — The protocol list is automatically printed out after communication only if a communication error occurs. Off — The protocol list is not printed out automatically. * : Initial setting: Off 2. Press the start key. The setting is set.

<table>
<tr><th>Item No.</th><th>Description</th></tr>
<tr><td>U612</td><td>
Setting how trailing edge margins are detected
This determines whether trailing edge margin is detected (to prevent image from being mutilated) while printing a received Fax.
1. Select On or Off using the cursor left/right keys.
<table>
<tr><th>Display</th><th>Description</th></tr>
<tr><td>On</td><td>Detects trailing edge margin</td></tr>
<tr><td>Off</td><td>Does not detect trailing edge margin</td></tr>
</table>
* : Initial setting: On
2. Press the start key. The setting is set.

Completion
Press the stop key. The screen for selecting a maintenance item No. is displayed.
</td></tr>
<tr><td>U620</td><td>
Setting the remote switching mode

Description
Sets the signal detection method for remote switching. Be sure to change the setting according to the type of telephone connected to the machine.

Setting
1. Press the start key.
2. Select [Remort Mode] and press the start key.
3. Select the mode.
<table>
<tr><th>Display</th><th>Description</th></tr>
<tr><td>One</td><td>One-shot detection</td></tr>
<tr><td>Cont</td><td>Continuous detection</td></tr>
</table>
* : Initial setting: One
4. Press the start key. The setting is set.

Completion
Press the stop key. The screen for selecting a maintenance item No. is displayed.
</td></tr>
</table>

Item No.	Description
U625	**Setting the transmission system 1** **Description** Makes settings for the auto redialing interval and the number of times of auto redialing. **Purpose** Change the setting to prevent the following problems: fax transmission is not possible due to too short redial interval, or fax transmission takes too much time to complete due to too long redial interval. **Method** 1. Press the start key. 2. Select the item to be set. **Display** / **Description** Interval — Setting the auto redialing interval Times — Setting the number of times of auto redialing **Setting the auto redialing interval** 1. Change the setting using the cursor left/right keys. **Description** / **Setting range** / **Initial setting** Redialing interval — 1 to 9 (min.) — 3 (120 V)/2 (220-240 V) 2. Press the start key. The value is set. **Setting the number of times of auto redialing** 1. Change the setting using the cursor left/right keys or numeric keys. **Description** / **Setting range** / **Initial setting** Number of redialing — 0 to 15 — 2 (120 V)/3 (220-240 V) 2. Press the start key. The value is set. **Completion** Press the stop key. The screen for selecting a maintenance item No. is displayed.

Item No.	Description
U630	**Setting communication control 1** **Description** Makes settings for fax transmission regarding the communication. **Method** 1. Press the start key. 2. Select the item to be set. **Display** / **Description** TX Speed — Sets the communication starting speed. RX Speed — Sets the reception speed. TX Echo — Sets the waiting period to prevent echo problems at the sender. RX Echo — Sets the waiting period to prevent echo problems at the receiver. **Setting the communication starting speed** Sets the initial communication speed when starting transmission. When the destination unit has V.34 capability, V.34 is selected for transmission, regardless of this setting. 1. Select the setting. **Display** / **Description** 14400bps/V17 — V.17, 14400 bps 9600bps/V29 — V.17, 9600 bps 4800bps/V27ter — V.27ter, 4800 bps 2400bps/V27ter — V.27ter, 2400 bps * : Initial setting: 14400bps/V17 2. Press the start key. The setting is set. **Setting the reception speed** Sets the reception speed that the sender is informed of using the DIS or NSF signal. When the destination unit has V.34 capability, V.34 is selected, regardless of the setting. 1. Select the setting. **Display** / **Description** 14400bps — V.17, V.33, V.29, V.27ter 9600bps — V.29, V.27ter 4800bps — V.27ter 2400bps — V.27ter (fallback only) * : Initial setting: 14400bps 2. Press the start key. The setting is set.

Item No.	Description
U630	**Setting the waiting period to prevent echo problems at the sender** Sets the period before a DCS signal is sent after a DIS signal is received. Used when problems occur due to echoes at the sender. 1. Select the setting. **Display** / **Description** 500 / Sends a DCS 500 ms after receiving a DIS. 300 / Sends a DCS 300 ms after receiving a DIS. * : Initial setting: 300 2. Press the start key. The setting is set. **Setting the waiting period to prevent echo problems at the receiver** Sets the period before an NSF, CSI or DIS signal is sent after a CED signal is received. Used when problems occur due to echoes at the receiver. 1. Select the setting. **Display** / **Description** 500 / Sends an NSF, CSI or DIS 500 ms after receiving a CED. 75 / Sends an NSF, CSI or DIS 75 ms after receiving a CED. * : Initial setting: 75 2. Press the start key. The setting is set. **Completion** Press the stop key. The screen for selecting a maintenance item No. is displayed.

Item No.	Description
U631	**Setting communication control 2** **Description** Makes settings regarding fax transmission. **Method** 1. Press the start key. 2. Select the item to be set. **Display** / **Description** ECM TX — Sets ECM transmission. ECM RX — Sets ECM reception. CED Freq — Sets the frequency of the CED signal. **Setting ECM transmission** To be set to Off when reduction of transmission costs is of higher priority than image quality. This should not be set to Off when connecting to the IP (Internet Protocol) telephone line. 1. Select the setting. **Display** / **Description** On — ECM transmission is enabled. Off — ECM transmission is disabled. * : Initial setting: On 2. Press the start key. The setting is set. **Setting ECM reception** To be set to Off when reduction of transmission costs is of higher priority than image quality. This should not be set to Off when connecting to the IP (Internet Protocol) telephone line. 1. Select the setting. **Display** / **Description** On — ECM reception is enabled. Off — ECM reception is disabled. * : Initial setting: On 2. Press the start key. The setting is set. **Setting the frequency of the CED signal** Sets the frequency of the CED signal. Used as one of the measures to improve transmission performance for international communications. 1. Select the setting. **Display** / **Description** 2100 — 2100 Hz 1100 — 1100 Hz * : Initial setting: 2100 2. Press the start key. The setting is set. **Completion** Press the stop key. The screen for selecting a maintenance item No. is displayed.

Item No.	Description
U632	**Setting communication control 3** **Description** Makes settings for fax transmission regarding the communication. **Method** 1. Press the start key. 2. Select the item to be set. **Display** / **Description** DIS 4Byte — Sets the DIS signal to 4 bytes. Num OF CNG(F/T) — Sets the CNG detection times in the fax/telephone auto select mode. **Setting the DIS signal to 4 bytes** Sets if bit 33 and later bits of the DIS/DTC signal are sent. 1. Select the setting. **Display** / **Description** On — Bit 33 and later bits of the DIS/DTC signal are not sent. Off — Bit 33 and later bits of the DIS/DTC signal are sent. * : Initial setting: Off 2. Press the start key. The setting is set. **Setting the CNG detection times in the fax/telephone auto select mode** Sets the CNG detection times in the fax/telephone auto select mode. 1. Select the setting. **Display** / **Description** 1Time — Detects CNG once. 2Time — Detects CNG twice. * : Initial setting: 2Time 2. Press the start key. The setting is set. **Completion** Press the stop key. The screen for selecting a maintenance item No. is displayed.

Item No.	Description
U633	**Setting communication control 4** **Description** Makes settings for fax transmission regarding the communication. **Purpose** To reduce transmission errors when a low quality line is used. **Method** 1. Press the start key. 2. Select the item to be set. **Enabling/disabling V.34 communication** Sets whether V.34 communication is enabled/disabled for transmission and reception. 1. Select the setting * : Initial setting: On 2. Press the start key. The setting is set. **Setting the V.34 symbol speed (3429 Hz)** Sets if the V.34 symbol speed 3429 Hz is used. 1. Select the setting * : Initial setting: On 2. Press the start key. The setting is set.

Display	Description
V.34	Enables or disables V.34 communication.
V.34-3429Hz	Sets the V.34 symbol speed (3429 Hz).
DIS 2Res	Sets the number of times of DIS signal reception.
RTN Check	Sets the reference for RTN signal output.

Display	Description
On	V.34 communication is enabled for both transmission and reception.
TX	V.34 communication is enabled for transmission only.
RX	V.34 communication is enabled for reception only.
Off	V.34 communication is disabled for both transmission and reception.

Display	Description
On	V.34 symbol speed 3429 Hz is used.
Off	V.34 symbol speed 3429 Hz is not used.

<table>
<tr><th>Item No.</th><th>Description</th></tr>
<tr><td>U633</td><td>

Setting the number of times of DIS signal reception

Sets the number of times to receive the DIS signal to once or twice. Used as one of the correction measures for transmission errors and other problems.

1. Select the setting.

Display	Description
Once	Responds to the first signal.
Twice	Responds to the second signal.

* : Initial setting: Once

2. Press the start key. The setting is set.

Setting the reference for RTN signal output

Sets the error line rate as the reference for RTN signal output. If transmission errors occur frequently due to the quality of the line, they can be reduced by lowering this setting.

1. Select the setting.

Display	Description
5%	Error line rate of 5%
10%	Error line rate of 10%
15%	Error line rate of 15%
20%	Error line rate of 20%

* : Initial setting: 15%

2. Press the start key. The setting is set.

Completion

Press the stop key. The screen for selecting a maintenance item No. is displayed.

</td></tr>
<tr><td>U634</td><td>

Setting communication control 5

Description

Sets the maximum number of error bytes judged acceptable when receiving a TCF signal. Used as a measure to ease transmission conditions if transmission errors occur.

Setting

1. Press the start key.
2. Change the setting using the cursor left/right keys or numeric keys.

Description	Setting range	Initial setting
Number of allowed error bytes when detecting TCF	0 to 255	0

3. Press the start key. The value is set.

Completion

Press the stop key. The screen for selecting a maintenance item No. is displayed.

</td></tr>
</table>

Item No.	Description
U640	**Setting communication time 1** **Description** Sets the detection time when one-shot detection is selected for remote switching. (This setting item will be displayed, but the setting made is ineffective.) Sets the detection time when continuous detection is selected for remote switching. (This setting item will be displayed, but the setting made is ineffective.) **Method** 1. Press the start key. 2. Select the item to be set. **Display** / **Description** Time (One) — Sets the one-shot detection time for remote switching. Time (Cont) — Sets the continuous detection time for remote switching. **Setting the one-shot detection time for remote switching** 1. Change the setting using the cursor left/right keys. **Description** / **Setting range** / **Initial setting** One-shot detection time for remote switching / 0 to 255 / 7 2. Press the start key. The value is set. **Setting the continuous detection time for remote switching** 1. Change the setting using the cursor left/right keys. **Description** / **Setting range** / **Initial setting** Continuous detection time for remote switching / 0 to 255 / 80 2. Press the start key. The value is set. **Completion** Press the stop key. The screen for selecting a maintenance item No. is displayed.

Item No.	Description
U641	**Setting communication time 2** **Description** Sets the time-out time for fax transmission. **Purpose** To improve transmission performance for international communications mainly. **Method** 1. Press the start key. 2. Select the item to be set. **Display** / **Description** T0 Time Out — Sets the T0 time-out time. T1 Time Out — Sets the T1 time-out time. T2 Time Out — Sets the T2 time-out time. Ta Time Out — Sets the Ta time-out time. Tb1 Time Out — Sets the Tb1 time-out time. Tb2 Time Out — Sets the Tb2 time-out time. Tc Time Out — Sets the Tc time-out time. Td Time Out — Sets the Td time-out time. **Setting the T0 time-out time** Sets the time before detecting a CED or DIS signal after a dialing signal is sent. Depending on the quality of the exchange, or when the auto select function is selected at the destination unit, a line can be disconnected. Change the setting to prevent this problem. 1. Change the setting using the cursor left/right keys. **Description** / **Setting range** / **Initial setting** T0 time-out time — 30 to 90 s — 56 2. Press the start key. The value is set. **Setting the T1 time-out time** Sets the time before receiving the correct signal after call reception. No change is necessary for this maintenance item. 1. Change the setting using the cursor left/right keys. **Description** / **Setting range** / **Initial setting** T1 time-out time — 30 to 90 s — 36 2. Press the start key. The value is set.

Item No.	Description
U641	

Setting the T2 time-out time

The T2 time-out time decides the following.
From CFR signal output to image data reception
From image data reception to the next signal reception
In ECM, from RNR signal detection to the next signal reception

1. Change the setting using the cursor left/right keys.

Description	Setting range	Initial setting	Change in value per step
T2 time-out time	1 to 255	69	100 ms

2. Press the start key. The value is set.

Setting the Ta time-out time

In the fax/telephone auto select mode, sets the time to continue ringing an operator through the connected telephone after receiving a call as a fax machine (see figure 1-3-17). A fax signal is received within the Ta set time, or the fax mode is selected automatically when the time elapses. In fax/telephone auto select mode, change the setting when fax reception is unsuccessful or a telephone fails to receive a call.

1. Change the setting using the cursor left/right keys.

Description	Setting range	Initial setting
Ta time-out time	1 to 255	30

2. Press the start key. The value is set.

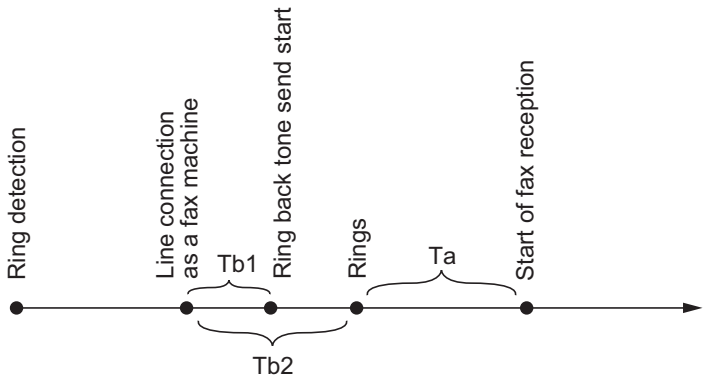

Figure 1-3-17 Ta/Tb1/Tb2 time-out time

Setting the Tb1 time-out time

In the fax/telephone auto select mode, sets the time to start sending the ring back tone after receiving a call as a fax machine (see figure 1-3-17). In fax/telephone auto select mode, change the setting when fax reception is unsuccessful or a telephone fails to receive a call.

1. Change the setting using the cursor left/right keys.

Description	Setting range	Initial setting	Change in value per step
Tb1 time-out time	1 to 255	20	100 ms

2. Press the start key. The value is set.

<table>
<tr><th>Item No.</th><th>Description</th></tr>
<tr><td>U641</td><td>

Setting the Tb2 time-out time

In the fax/telephone auto select mode, sets the time to start ringing an operator through the connected telephone after receiving a call as a fax machine (see figure 1-3-17). In the fax/telephone auto select mode, change the setting when fax reception is unsuccessful or a telephone fails to receive a call.

1. Change the setting using the cursor left/right keys.

Description	Setting range	Initial setting	Change in value per step
Tb2 time-out time	1 to 255	80	100 ms

2. Press the start key. The value is set.

Setting the Tc time-out time

In the TAD mode, set the time to check if there are any triggers for shifting to fax reception after a connected telephone receives a call. Only the telephone function is available if shifting is not made within the set Tc time.

In the TAD mode, change the setting when fax reception is unsuccessful or a telephone fails to receive a call.

1. Change the setting using the cursor left/right keys.

Description	Setting range	Initial setting
Tc time-out time	1 to 255	60

2. Press the start key. The value is set.

Setting the Td time-out time

Sets the length of the time required to determine silent status (fax), one of the triggers for Tc time check. In the TAD mode, change the setting when fax reception is unsuccessful or a telephone fails to receive a call. Be sure not to set it too short; otherwise, the mode may be shifted to fax while the unit is being used as a telephone.

1. Change the setting using the cursor left/right keys.

Description	Setting range	Initial setting
Td time-out time	1 to 255	9 (120 V)/6 (220-240 V)

2. Press the start key. The value is set.

Completion

Press the stop key. The screen for selecting a maintenance item No. is displayed.

</td></tr>
</table>

Item No.	Description
U650	**Setting modem 1** **Description** Sets the G3 cable equalizer. Sets the modem detection level. **Purpose** Perform the following adjustment to make the equalizer compatible with the line characteristics. To improve the transmission performance when a low quality line is used. **Method** 1. Press the start key. 2. Select the item to be set. **Setting the G3 transmission cable equalizer** 1. Select [0dB], [4dB], [8dB] or [12dB]. * : Initial setting: 0dB 2. Press the start key. The setting is set. **Setting the G3 reception cable equalizer** 1. Select [0dB], [4dB], [8dB] or [12dB]. * : Initial setting: 0dB 2. Press the start key. The setting is set. **Setting the modem detection level** 1. Select [-33dBm], [-38dBm], [-43dBm] or [-48dBm]. * : Initial setting: -43dBm 2. Press the start key. The setting is set. **Completion** Press the stop key. The screen for selecting a maintenance item No. is displayed.

Display	Description
Reg G3 TX Eqr	Sets the G3 transmission cable equalizer.
Reg G3 RX Eqr	Sets the G3 reception cable equalizer.
RX Mdm Level	Sets the modem detection level.

Item No.	Description
U651	**Setting modem 2** **Description** Sets the modem output level. Sets the DTMF output level of a push-button dial telephone. **Purpose** Used if problems occur when sending a signal with a push-button dial telephone. **Setting** 1. Press the start key. 2. Select the item to be set. 3. Change the setting using the cursor left/right keys or numeric keys. 4. Press the start key. The setting is set. **Completion** Press the stop key. The screen for selecting a maintenance item No. is displayed.

Display	Description	Setting range	Initial setting
Sgl LV Mdm	Modem output level	1 to 15	9 (120 V) 10 (220-240 V)
DTMF LV(C)	DTMF output level (main value)	0 to 15.0	5 (120 V) 10.5 (220-240 V)
DTMF LV(D)	DTMF output level (level difference)	0 to 5.5	2 (120 V) 2.5 (220-240 V)

Item No.	Description
U660	**Setting the NCU** **Description** Makes setting regarding the network control unit (NCU). **Purpose** To be executed as required. **Method** 1. Press the start key. 2. Select the item to be set. **Display** / **Description** Exchange — Sets the connection to PBX/PSTN. Dial Tone — Sets PSTN dial tone detection. Busy Tone — Sets busy tone detection. PBX Setting — Setting for a PBX. DC Loop — Sets the loop current detection before dialing. **Setting the connection to PBX/PSTN** Selects if a fax is to be connected to either a PBX or public switched telephone network. 1. Select the setting. **Display** / **Description** PSTN — Connected to the public switched telephone network. PBX — Connected to a PBX. * : Initial setting: PSTN 2. Press the start key. The setting is set. **Setting PSTN dial tone detection** Selects if the dial tone is detected to check the telephone is off the hook when a fax is connected to a public switched telephone network. 1. Select the setting. **Display** / **Description** On — Detects the dial tone. Off — Does not detect the dial tone. * : Initial setting: On 2. Press the start key. The setting is set.

Item No.	Description
U660	**Setting busy tone detection** When a fax signal is sent, sets whether the line is disconnected immediately after a busy tone is detected, or the busy tone is not detected and the line remains connected until T0 time-out time. Fax transmission may fail due to incorrect busy tone detection. When set to 2, this problem may be prevented. However, the line is not disconnected within the T0 time-out time even if the destination line is busy. 1. Select the setting. **Display** / **Description** On / Detects busy tone. Off / Does not detect busy tone. * : Initial setting: On 2. Press the start key. The setting is set. **Setting for a PBX** Selects the mode to connect an outside call when connected to a PBX. According to the type of the PBX connected, select the mode to connect an outside call. 1. Select the setting. **Display** / **Description** Flash / Flashing mode Loop / Code number mode * : Initial setting: Loop 2. Press the start key. The setting is set. **Setting the loop current detection before dialing** Sets if the loop current detection is performed before dialing. 1. Select the setting. **Display** / **Description** On / Performs loop current detection before dialing. Off / Does not perform loop current detection before dialing. * : Initial setting: On 2. Press the start key. The setting is set. **Completion** Press the stop key. The screen for selecting a maintenance item No. is displayed.

Item No.	Description
U670	**Outputting lists** **Description** Outputs a list of data regarding fax transmissions. Printing a list is disabled either when a job is remaining in the buffer or when [Pause All Print Jobs] is pressed to halt printing. **Purpose** To check conditions of use, settings and transmission procedures of the fax. **Method** 1. Press the start key. 2. Select the item to be output. 3. Press the start key. The selected list is output. **Completion** Press the stop key. The screen for selecting a maintenance item No. is displayed.

Display	Description
Sys Conf Report	Outputs a list of software switches, self telephone number, confidential boxes, ROM versions and other information.
Action List	Outputs a list of error history, transmission line details and other information.
Self Sts Report	Outputs a list of settings in maintenance mode (own-status report) regarding fax transmission only.
Protocol List	Outputs a list of transmission procedures.
Error List	Outputs a list of error.
Addr List(No.)	Outputs address book in order IDs were added
Addr List(Idx)	Outputs address book in order of names
One-touch List	Outputs a list of one-touch.
Group List	Outputs a list of group.

Item No.	Description
U695	**FAX function customize** **Description** Sets fax batch transmission ON/OFF. Also changes the print size priority at the time of small size reception. **Purpose** To be executed as required. **Setting** 1. Select the setting. **Setting: [FAX Bulk TX]** 1. Select [On] or [Off]. * : Initial setting: On 2. Press the start key. The setting is set. **Setting: [A5 Pt Pri Chg]** 1. Select [ON] or [OFF]. * : Initial setting: Off 2. Press the start key. The setting is set. **Completion** Press the stop key. The screen for selecting a maintenance item No. is displayed.

Display	Description
FAX Bulk TX	fax batch transmission On/Off
A5 Pt Pri Chg	Change of print size priority at the time of small size reception

Display	Description
On	Fax batch transmission is enabled.
Off	Fax batch transmission is disabled.

Display	Description
On	At the time of A5 size reception: A5→B5→A4
Off	At the time of A5 size reception: A5→A4→B5

Item No.	Description
U699	**Setting the software switches** **Description** Sets the software switches on the FAX control PWB individually. **Purpose** To change the setting when a problem such as split output of received originals occurs. Since the communication performance is largely affected, normally this setting need not be changed. **Method** 1. Press the start key. 2. Press [SW No.]. 3. Enter the desired software switch number (3 digits) using the numeric keys and press the enter key. 4. Use numeric keys 7 to 0 to switch each bit between 0 and 1. 5. Press the start key to set the value. **Completion** Press the stop key. The screen for selecting a maintenance item No. is displayed. **List of Software Switches of Which the Setting Can Be Changed** **<Communication control procedure>**

No.	Bit	Item
36	7654	Coding format in transmission
	3210	Coding format in reception
37	5	33600 bps/V34
	4	31200 bps/V34
	3	28800 bps/V34
	2	26400 bps/V34
	1	24000 bps/V34
	0	21600 bps/V34
38	7	19200 bps/V34
	6	16800 bps/V34
	5	14400 bps/V34
	4	12000 bps/V34
	3	9600 bps/V34
	2	7200 bps/V34
	1	4800 bps/V34
	0	2400 bps/V34
41	3	FSK detection in V.8
42	4	4800 bps when low-speed setting is active
	2	FIF length in transmission of more than 4 times of DIS/DTC signal

Item No.	Description
U699	

<Communication time setting>

No.	Bit	Item
53	76543210	T3 timeout setting
54	76543210	T4 timeout setting (automatic equipment)
55	76543210	T5 timeout setting
60	76543210	Time before transmission of CNG (1100 Hz) signal
63	76543210	T0 timeout setting (manual equipment)
64	7	Phase C timeout in ECM reception
66	76543210	Timeout 1 in countermeasures against echo
68	76543210	Timeout for FSK detection start in V.8

<Modem setting>

No.	Bit	Item
89	76543	RX gain adjust

<NCU setting>

No.	Bit	Item
121	7654	Dial tone/busy tone detection pattern
122	7654	Busy tone detection pattern
	1	Busy tone detection in automatic FAX/TEL switching
125	76543210	Access code registration for connection to PSTN
126	7654	FAX/TEL automatic switching ringback tone ON/OFF cycle

<Calling time setting>

No.	Bit	Item
133	76543210	DTMF signal transmission time
134	76543210	DTMF signal pause time
141	76543210	Ringer detection cycle (minimum)
142	76543210	Ringer detection cycle (maximum)
143	76543210	Ringer ON time detection
144	76543210	Ringer OFF time detection
145	76543210	Ringer OFF non-detection time
147	76543210	Dial tone detection time (continuous tone)
148	76543210	Allowable dial tone interruption time
149	76543210	Time for transmitting selection signal after closing the DC circuit
151	76543210	Ringer frequency detection invalid time

Item No.	Description
U910	**Clearing the print coverage data** **Description** Clears the accumulated data for the print coverage per A4 size paper and its period of time (as shown on the service status report). **Purpose** To clear data as required at times such as during maintenance service. **Method** 1. Press the start key. 2. Select [Execute]. 3. Press the start key. The print coverage data is cleared. **Completion** Press the stop key. The screen for selecting a maintenance item No. is displayed.

Item No.	Description
U917	**Setting backup data reading/writing** **Description** Retrieves the backup data to a USB memory from the machine; or writes the data from the USB memory to the machine. **Purpose** To store and write data when replacing the HDD. **Method** 1. Press the power key on the operation panel, and after verifying the power indicator has gone off, switch off the main power switch. 2. Insert USB memory in USB memory slot. 3. Turn the main power switch on. Wait for 10 seconds to allow the machine to recognize the USB memory. 4. Enter the maintenance item. 5. Press the start key. 6. Select [Export] or [Import] and press the start key.

Display	Description
Import	Writing data from the USB memory to the machine
Export	Retrieving from the machine to a USB memory

7. Select the item.

Display	Description	Depending data
Address	Address book	-
Job Accnt	Job accounting	-
One Touch	Information on one-touch key	Address book
User	User managements	Job accounting
Document	Document box information	Job accountings and user manage-ments
Shortcut	Short information	Job accountings, user managements and document box information
Fax Fwd	FAX transfer information	Job accountings, user managements and document box information
System	System setting information	-
Network	Network setting information	-
Job Set	JOb setting information	-
Printer	Printer setting information	-
Fax set	FAX setting information	-
Program	Program information	Job accountings, user managements and document box information
Panel Set	Panel setting information	Job accountings, user managements and document box information

* : Since data are dependent with each other, data other than those assigned are also retrieved or written in.

Item No.	Description
U917	8. Select [On]. 9. Press the start key. Starts reading or writing. The progress of selected item is displayed in %. When an error occurs, the operation is canceled and an error code is displayed. 10. When normally completed, [Fin] is displayed. 11. Turn the main power switch off and on after completing writing when selecting [Import].

Error Codes

Codes	Description
e0000	Unspecified error
e0001	Parameter error
e0002	Dummy file creation error
e0003	XML file for Import is not found.
e0004	Exported file is not found.
e0100 to e01ff	Address book processing error
e0200 to e02ff	One-touch processing error
e0300 to e03ff	User managements processing error
e0400 to e04ff	Panel program processing error
e0500 to e05ff	FAX transmission processing error
e0600 to e06ff	System setting processing error
e0700 to e07ff	Network processing error
e0800 to e08ff	Job accounting processing error
e0900 to e09ff	Short cut processing error
e0a00 to e0aff	Job processing error
e0b00 to e0bff	FAX processing error
e0c00 to e0cff	Printer processing error
e0d00 to e0dff	Panel processing error
e0e00 to e0eff	Document box processing error
e1000 to e1fff	Device processing error
e2000 to e2fff	SOAP IF processing error
e3000 to e3fff	KM-WSDL IF processing error
e4000 to e4fff	import preparation error (e4002) Import file is not found. (e4008)File header information error
e5000 to e5fff	SOAP data rewriting processing error

Item No.	Description
U917	**Supplement** The following restrictions apply to the data which were imported from 4 in 1 models (with FAX) to 3 in 1 models (without FAX). Personal address book: FAX-related data are not imported. Group address book: Group addresses including FAX addresses are not imported. Job accounting data: Initial values are added for FAX-related data. One-touch data: Groups assigned with FAX addresses or those including FAX are not imported. User management data: Initial values are added for out-going FAXes of authentication. Program data: Not imported. (The same applies when data are imported from 3 in 1 to 4 in 1 models.) **Completion** Press the stop key. The screen for selecting a maintenance item No. is displayed.

<table>
<tr><th>Item No.</th><th>Description</th></tr>
<tr><td>U920</td><td>

Checking the copy counts

Description
Checks the copy counts.
Purpose
To check the copy counts.

Method
1. Press the start key. The current counts are displayed.

<table>
<tr><th>Display</th><th>Description</th></tr>
<tr><td>Color Copy H</td><td>Count value of color copy (Coverage: High)</td></tr>
<tr><td>Color Copy M</td><td>Count value of color copy (Coverage: Middle)</td></tr>
<tr><td>Color Copy L</td><td>Count value of color copy (Coverage: Low)</td></tr>
<tr><td>B/W Copy</td><td>Count value of black/white copy</td></tr>
<tr><td>Color Prn H</td><td>Count value of color print (Coverage: High)</td></tr>
<tr><td>Color Prn M</td><td>Count value of color print (Coverage: Middle)</td></tr>
<tr><td>Color Prn L</td><td>Count value of color print (Coverage: Low)</td></tr>
<tr><td>B/W Prn</td><td>Count value of black/white print</td></tr>
<tr><td>B/W Fax</td><td>Count value of black/white FAX</td></tr>
</table>

Completion
Press the stop key. The screen for selecting a maintenance item No. is displayed.

</td></tr>
<tr><td>U927</td><td>

Clearing the all copy counts and machine life counts (one time only)

Description
Resets all of the counts back to zero.

Supplement
The total account counter and the machine life counter can be cleared only once if all count values are 1000 or less.

Method
1. Press the start key.
2. Select [Execute].
3. Press the start key. All copy counts and machine life counts are cleared.

Completion
Press the stop key. The screen for selecting a maintenance item No. is displayed.

</td></tr>
</table>

<table>
<tr><th>Item No.</th><th>Description</th></tr>
<tr><td>U928</td><td>
Checking machine life counts

Description
Displays the machine life counts.
Purpose
To check the machine life counts.

Method
1. Press the start key. The current machine life counts is displayed.
<table>
<tr><th>Display</th><th>Description</th></tr>
<tr><td>Cnt</td><td>Machine life counts</td></tr>
</table>

Completion
Press the stop key. The screen for selecting a maintenance item No. is displayed.
</td></tr>
<tr><td>U977</td><td>
Data capture mode

Description
Store the print data sent to the machine into USB memory.
Purpose
In case to occur the error at printing, check the print data sent to the machine.

Method
1. Insert USB memory in USB memory slot.
2. Turn the main power switch on.
3. Enter the maintenance item.
4. Press the start key.
5. Select [Execute].
6. Press the start key.
7. Send the print data to the machine.
Once the print data is stored into USB memory, [OK] will be displayed.

Completion
Press the stop key. The screen for selecting a maintenance item No. is displayed.
</td></tr>
<tr><td>U995</td><td>
Memory data Individual setting

Description
Displays the memory data.
Purpose
This mode need not be executed. When the status report is output, the setting is displayed.

Completion
Press the stop key. The screen for selecting a maintenance item No. is displayed.
</td></tr>
</table>

1-3-2 Service mode

The machine is equipped with a maintenance function which can be used to maintain and service the machine.

(1) Executing a service mode

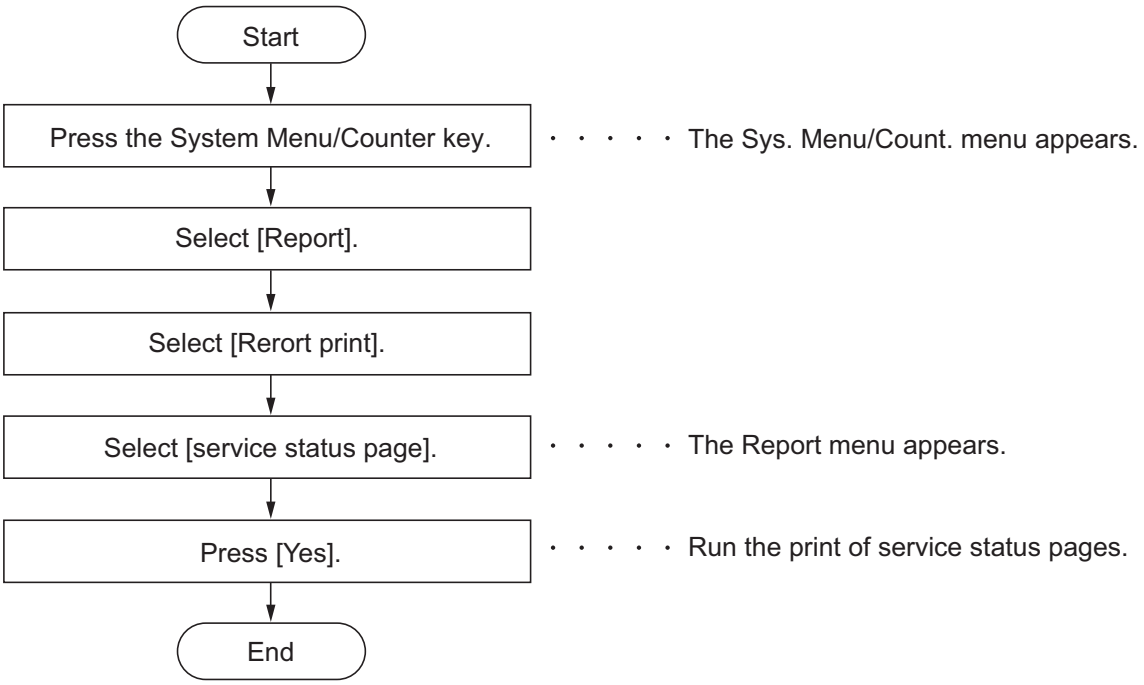

(2) Description of service mode

Service items	Description
Service Status	**Printing a status page for service purpose** **Description** Prints a status page for service purpose. The status page includes various settings and service cumulative. **Purpose** To acquire the current printing environmental parameters and cumulative information. **Method** 1. Select [Service status]. 2. Select [YES]. Two pages will be printed. **Completion** Press the System Menu/Counter key.

Service items	Description

Service status page (1)

Service Status Page

MFP

(2) 2013/07/24 15:15

(1) Firmware version 2PY_2000.000.000 2013.07.24

(3)	(4)	(5)
[XXXXXXXX]	[XXXXXXXX]	[XXXXXXXX]

Controller Information

Memory status

(7)	Standard Size	128.0 KB
(8)	Option Slot	128.0 KB
(9)	Total Size	2.0 GB

Time

(10)	Local Time Zone	+01:00 Tokio
(11)	Date and Time	06/04/2010 12:00
(12)	Time Server	10.183.53.13

Installed Options

(13)	Paper Feeder2:	Installed
(14)	Paper Feeder3:	Installed
(15)	Memory Card	Installed
(16)	SSD	Not Installed
(17)	Card Authentication Kit (B)	Installed
(18)	UG-33	Not Installed
(19)	USB Keyboard	Connected
(20)	USB Keyboard Type	US-English

Print Coverage

(21) Average(%) / Usage Page(A4/Letter Conversion)

(22) Total

K:	1.10	/ 1111111.11
C:	2.20	/ 2222222.22
M:	3.30	/ 3333333.33
Y:	4.40	/ 4444444.44

(23) Copy

K:	1.10	/ 1111111.11
C:	2.20	/ 2222222.22
M:	3.30	/ 3333333.33
Y:	4.40	/ 4444444.44

(24) Printer

K:	1.10	/ 1111111.11
C:	2.20	/ 2222222.22
M:	3.30	/ 3333333.33
Y:	4.40	/ 4444444.44

(25) FAX

K:	1.10	/ 1111111.11

(26) Period (27/10/2009 - 03/11/2009 08:40)

(27) Last Page K/C/M/Y (%) 1.00 / 1.00 / 1.00 / 1.00

FAX Information

(28)	Rings (Normal)	3	
(29)	Rings (FAX/TEL)	3	
(30)	Rings (TAD)	3	
(31)	FRPO Status		
	User Top Margin	A1+A2/100	0.00
	User Left Margin	A3+A4/100	0.00
	.		
	.		
	.		
	.		
	.		
	.		
	.		
	.		
	PDF mode	Y5	00

RP Code

(32)	1234 5678 9012
(33)	5678 9012 3456
(34)	9012 3456 7890
(35)	3456 7890 1234

1

(6) [XXXXXXXXXXXXXXXX]

Figure 1-3-18

Service items	Description
	Service status page (2)

Service Status Page

MFP 2013/07/24 15:15

Firmware version 2PY_2000.000.000 2013.07.24 [XXXXXXXX] [XXXXXXXX] [XXXXXXXX]

Engine Information

(36) NVRAM Version _1F31225_1F31225
(37) Scanner Version 2PY_1200.001.089
(38) FAX Slot1
FAX BOOT Version 2PY_5000.001.001
FAX APL Version 2PY_5100.001.001
FAX IPL Version 2PY_5200.001.001
(39) MAC Address 00:C0:EE:D0:01:0D
(40) DP Counters
Total 1234

Send Information

(41) Date and Time 10/04/06 15:30
(42) Address mail@bjd.ne.jp

1/2 **(43) (44)**
(45) 100/100
(46) 0/0/0/0/0
(47) 0/0/0/0/0
(48) 0/0/0/0/
(49) 0000000/0000000/0000000/0000000/0000000/0000000/
0000000/0000000/0000000/0000000/0000000/0000000/0000000/0000000/0000000/0000000/
F00/U00/0/0/0/0/0/30/30/70/70/abcde/1/0/1/
(50) (51) (52) (53) (54) (55) (56) (57) (58) (59) (60) (61) (62) (63) (64)
(65) 0000/0000/0000/0000/0000/0000/0000/0000/0000/0000/0000/0000/0000/0000/0000/
0000/0000/0000/0000/0000/0000/0000/0000/0000/0000/
(66) 0000/0000/0000/0000/0000/0000/0000/0000/0000/0000/0000/0000/0000/0000/0000/
0000/0000/0000/0000/0000/0000/0000/0000/0000/0000/0000/0000/0000/0000/0000/
(67) 12345678/11223344/00001234abcd567800001234abcd5678/0123456789012345678901234567890 1/0008/00/07
12345678/11223344/00001234abcd567800001234abcd5678/0123456789012345678901234567890 1/0008/00/07
12345678/11223344/00001234abcd567800001234abcd5678/0123456789012345678901234567890 1/0008/00/07
12345678/11223344/00001234abcd567800001234abcd5678/0123456789012345678901234567890 1/0008/00/07
(68) XXXXXXXX/
(69) [ ] [ ]
[2PY_81BR.001.010] [ABCDEFGHIJ] [ABCDEFGHIJ] **(70) (71) (72)**
(73) 00070107FE/0700FE00FE/
0/3/ **(74) (75)**
0/1.0/2.5/ **(76) (77) (78)**
1/5/ **(79) (80)**
1/ **(81)**
1/15:47 **(82) (83)**
1/ **(84)**
(85) ABCDEFGHIJ/ABCDEFGHIJ/ABCDEFGHIJ/ABCDEFGHIJ/

2 [XXXXXXXXXXXXXXXX]

Figure 1-3-19

Service items	Description
	Detail of service status page

No.	Description	Supplement
(1)	Firmware version	-
(2)	System date	-
(3)	Engine soft version	-
(4)	Engine boot version	-
(5)	Operation panel mask version	-
(6)	Machine serial number	-
(7)	Standard memory size	-
(8)	Optional memory size	-
(9)	Total memory size	-
(10)	Local time zone	-
(11)	Report output date	Day/Month/Year hour:minute
(12)	NTP server name	-
(13)	Presence or absence of the optional paper feeder 2	Installed/Not Installed
(14)	Presence or absence of the optional paper feeder 3	Installed/Not Installed
(15)	Presence or absence of the SSD	Installed/Not Installed
(16)	Presence or absence of the optional memory card	Installed/Not Installed
(17)	Presence or absence of the optional IC card authentication kit	Installed/Not Installed/Trial
(18)	Presence or absence of UG-33	Installed/Not Installed
(19)	Presence or absence of the USB Keyboard	Connected/Not Connected
(20)	Type of the USB Keyboard	US-English/US-English with Euro
(21)	Page of relation to the A4/Letter	* :Print Coverage provides a close-matching reference of toner consumption and will not match with the actual toner consumption.
(22)	Average coverage for total	Black/Cyan/Magenta/Yellow
(23)	Average coverage for copy	Black/Cyan/Magenta/Yellow
(24)	Average coverage for printer	Black/Cyan/Magenta/Yellow
(25)	Average coverage for fax	Black
(26)	Cleared date and output date	-
(27)	Coverage on the final output page	-

Service items	Description

No.	Description	Supplement
(28)	Number of rings	0 to 15
(29)	Number of rings before automatic switching	0 to 15
(30)	Number of rings before connecting to answering machine	0 to 15
(31)	FRPO setting	-
(32)	RP code	Code the engine software version and the date of update.
(33)	RP code	Code the main software version and the date of update.
(34)	RP code	Code the engine software version and the date of the previous update.
(35)	RP code	Code the main software version and the date of the previous update.
(36)	NV RAM version	_ 1F3 1225 _ 1F3 1225 (a) (b) (c) (d) (e) (f) (a) Consistency of the present software version and the database _ (underscore): OK * (Asterisk): NG (b) Database version (c) The oldest time stamp of database version (d) Consistency of the present software version and the ME firmware version _ (underscore): OK * (Asterisk): NG (e) ME firmware version (f) The oldest time stamp of the ME database version Normal if (a) and (d) are underscored, and (b) and (e) are identical with (c) and (f).
(37)	Scanner firmware version	-
(38)	Fax firmware version	-
(39)	Mac address	-
(40)	DP counter	Total number of sheets (first side and second side)
(41)	The last sent date and time	-
(42)	Transmission address	-
(43)	Destination information	-
(44)	Area information	-
(45)	Margin settings	Top margin/Left margin

Service items	Description

No.	Description	Supplement
(46)	Top offset	MP tray/Paper feeder 1/Paper feeder 2 /Duplex/ Reversal
(47)	Left offset	MP tray/Paper feeder 1/Paper feeder 2 /Duplex/ Reversal
(48)	Margin/Page length/Page width settings	Top margin integer part/Top margin decimal part/ Left margin integer part/Left margin decimal part/
(49)	Life counter (The first line)	Machine life/MP tray/Cassette/Paper feeder 1/ Paper feeder 2 /Duplex
	Life counter (The second line)	Drum unit K/Drum unit C/Drum unit M/Drum unit Y/ Intermediate transfer unit
(50)	Panel lock information	F00: OFF/ F01 to F03: Partial lock/ F04: Full lock
(51)	USB information	00: Not installed/ 01: Full speed/ 02: Hi speed
(52)	Paper handling information	0: Paper source unit select/ 1: Paper source unit
(53)	Auto cassette change	0: OFF/ 1: ON
(54)	Color printing double count mode	0: All single counts 3: Folio, Single count, Less than 330 mm (length)
(55)	Black and white printing double count mode	0: All single counts 3: Folio, Single count, Less than 330 mm (length)
(56)	Billing counting timing	-
(57)	Temperature (machine inside)	-
(58)	Temperature (machine outside)	-
(59)	Relative humidity (machine outside)	-
(53)	Absolute humidity (machine outside)	-
(61)	Fixed assets number	-
(62)	Job end judgment time-out time	-
(63)	Job end detection mode	-
(64)	Prescribe environment reset	0: OFF/ 1: ON
(65)	Media type attributes 1 to 28 (Not used: 18, 19, 20) * : For details on settings, refer to MDAT command in “Prescribe Commands Reference Manual.	Weight settings 0: Light 1: Normal 1 2: Normal 2 3: Normal 3 4: Heavy 1 5: Heavy 2 6: Heavy 3 7: Extra Heavy Fuser settings 0: High 1: Middle 2: Low 3: Vellum Duplex settings 0: Disable 1: Enable
(66)	Calibration information	Black/Cyan/Magenta/Yellow

Service items	Description

No.	Description	Supplement
(67)	RFID information	-
(68)	RFID reader/writer version information	-
(69)	Soft version of the optional paper feeder	Paper feeder 1/Paper feeder 2
(70)	Version of the optional message	-
(71)	Color table version for printer	-
(72)	Color table 2 version for printer	-
(73)	Maintenance information	-
(74)	Altitude	0: Standard 1: High altitude 1 2: High altitude 2
(75)	Charger roller correction	1 to 5
(76)	Configuring toner coverage counters	0: Full-color count display 1: Color coverage count display
(77)	Low coverage setting	0.1 to 100.0
(78)	Middle coverage setting	0.1 to 100.0
(79)	Toner low setting	0: Enabled 1: Disabled
(80)	Toner low detection level	0 to 100 (%)
(81)	Full-page print mode	0: Normal mode (Factory setting) 1: Full-page mode
(82	Wake UP mode	0: OFF (Don't wake up) 1: ON (Do wake up)
(83)	Wake Up Timer	Displays the wake-up time
(84)	BAM conformity Mode setting	0: Un-suiting Mode 1: Conformity Mode
(85)	Drum serial number	Black/Cyan/Magenta/Yellow

Code conversion

A	B	C	D	E	F	G	H	I	J
0	1	2	3	4	5	6	7	8	9

Service items	Description
Network Status	**Printing a status page for network** **Description** Prints a status page for network. **Purpose** To acquire the detailed network setting information. **Method** 1. Enter the Service Setting menu. 2. Select [Network Status]. 3. Press the start key. 4. Press [Yes] (the Left Select key). Network status page will be printed. **Completion** Press the stop key.

Service items	Description
Test Page	**Printing a test page** **Description** Four colors are printed respectively with halftones of three different levels. **Purpose** To check the activation of the developer and drum units of four colors. **Method** 1. Enter the Service Setting menu. 2. Select [Test Page]. 3. Press the start key. 4. Press [Yes] (the Left Select key). Test page will be printed. 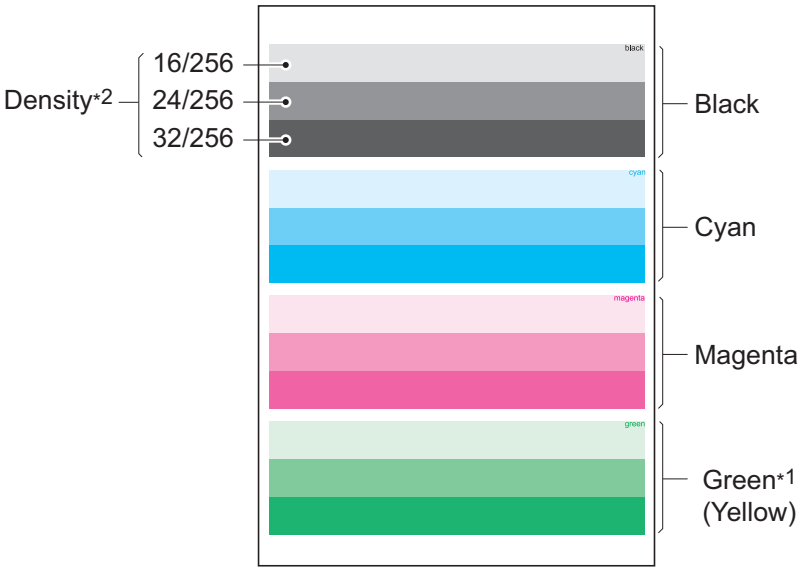 *1: Since focusing in yellow is hardly readable, yellow is mixed with cyan for more readability, resulting in green. *2: Each portion of colors has three different magnitude of halftones (bands). If focus is excessively lost, dots are not recognizable with the 16/256 band, resulting in uneven density. It also results in vertical streaks in the 24/256 and/or 32/256 bands. **Figure 1-3-20** **Completion** Press the stop key.

Service items	Description
Developer Setting	**Entering initial value for replacing the developing unit** **Description** After replacing the developing unit, enter the initial value (6-digit data) assigned on a label attached to the package or developing unit. **Purpose** To set the initial value after replacing the developing unit. **Method** 1. Enter the Service Setting menu. 2. Select [DeveloperSetting]. 3. Press the start key. Enter the initial value (6-digit data) using the numeric keys. 4. Press the start key. The initial value is set. 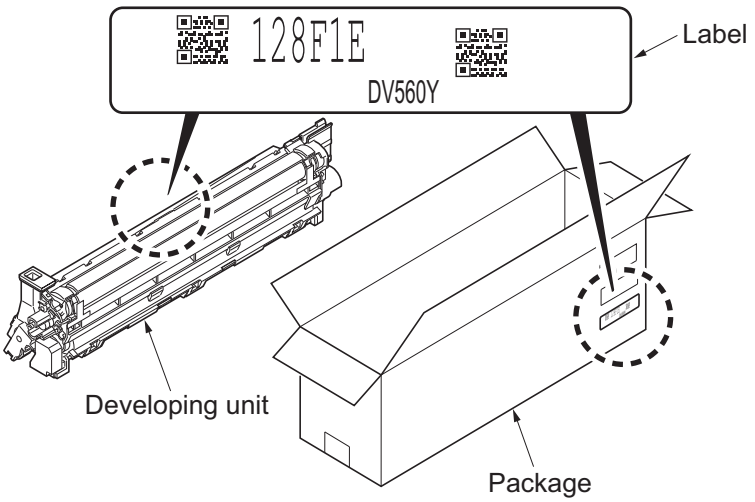 **Figure 1-3-21** **Completion** Press the stop key.

Service items	Description
Developer Refresh	**Performing developer refresh** **Description** The laser output of the image data for developer refreshing is carried out, and operation to exposure, developing, and primary transfer is performed by 10 pages (paper is not fed). **Purpose** To perform cleaning when faulty images occur and a line appears longitudinally. **Method** 1. Enter the Service Setting menu. 2. Select [Developer Refresh]. 3. Press the start key. 4. Press [Yes] (the Left Select key). Developer refresh is performed.  **Figure 1-3-22** **Completion** Press the stop key.

Service items	Description
Laser Scanner Cleaning	**Performing LSU cleaning** **Description** The LSU cleaning motor drives the cleaning pad which in turn wipes clean the LSU dust shield glass. **Purpose** To perform cleaning when the printed image is bad and stripes are seen in the vertical direction. **Method** 1. Enter the Service Setting menu. 2. Select [Laser Scanner Cln]. 3. Press the start key. 4. Press [Yes] (the Left Select key). LSU cleaning is performed. **Completion** Press the stop key.
Drum surface refreshing	**Performing drum surface refreshing** **Description** Rotates the drum approximately 2 minutes with toner lightly on the overall drum. The cleaning blade in the drum unit scrapes toner off the drum surface to clean it. **Purpose** To clean the drum surface when image failure occurs due to the drum. This mode is effective when dew condensation on the drum occurs. **Method** 1. Enter the Service Setting menu. 2. Select [Drum Refresh]. 3. Press the start key. 4. Press [Yes] (the Left Select key). Drum surface refreshing is performed. **Completion** Press the stop key.

Service items	Description
Altitude adjustment	**Setting altitude adjustment** **Description** Sets the altitude adjustment mode. **Purpose** Used when print quality deteriorates in an installation at the altitude of 1,500 meters or higher. **Method** 1. Enter the Service Setting menu. 2. Select [Altitude Adj]. 3. Press the start key. 4. Select [Normal], [High 1] or [High 2)]. 5. Press the start key. The setting is set. **Completion** Press the stop key.
Main charger adjustment	**Setting main charger output** **Description** Sets the main charger output. This is executable only when the altitude adjustment mode is set to [Normal]. **Purpose** Execute when the image density declines or an offset has occurred. **Method** 1. Enter the Service Setting menu. 2. Select [MC]. 3. Press the start key. 4. Select [1], [2] or [3]. 5. Press the start key. The setting is set. **Completion** Press the stop key.

Service items	Description
FAX country code	**FAX Country Code** **Description** Initializes software switches and all data in the backup data on the FAX control PWB, according to the destination. **Purpose** To initialize the FAX control PWB. **Method** 1. Enter the Service Setting menu. 2. Select [FAX Country Code]. 3. Press the start key. 4. Enter a destination code using the numeric keys. 5. Press the start key. The setting is set. 6. Press the start key. Data initialization starts. **Destination code list**

Code	Destination	Code	Destination
000	Japan	250	Russia
007	Argentina	253	CTR21 (European nations)
009	Australia		Italy
022	Brazil		Germany
038	China		Spain
080	Hong Kong		U.K.
084	Indonesia		Netherlands
088	Israel		Sweden
097	Korea		France
108	Malaysia		Austria
115	Mexico		Switzerland
126	New Zealand		Belgium
136	Peru		Denmark
137	Philippines		Finland
152	Saudi Arabiat		Portugal
156	Singapore		Ireland
159	South Africa		Norway
169	Thailand	254	Taiwan
181	U.S.A.		

Completion
Press the stop key.

Service items	Description
FAX call Setting	**FAX call setting** **Description** Selects if a fax is to be connected to either a PBX or public switched telephone network. Selects the mode to connect an outside call when connected to a PBX. Access code registration for connection to PSTN. **Purpose** To be executed as required. **Method** 1. Enter the Service Setting menu. 2. Select [FAX Call Set.]. 3. Press the start key. **Display** / **Description** Exchange Select. — Setting the connection to PBX/PSTN PBX Setting — Setting for a PBX Dial No. to PSTN — Setting access code to PSTN **Setting the connection to PBX/PSTN** 1. Select [Exchange Select.]. 2. Press the start key. 3. Select [PBX] or [PSTN]. 4. Press the start key. The setting is set. **Setting for PBX** 1. Select [PBX Setting]. 2. Press the start key. 3. Select [Loop], [Flash] or [Earth]. 4. Press the start key. The setting is set. **Setting access code to PSTN** 1. Select [Dial No. to PSTN]. 2. Press the start key. 3. Enter access code using the numeric keys. (0 to 9, 00 to 99) 4. Press the start key. The setting is set. **Completion** Press the stop key.

Service items	Description
Remote diagnostics	**Setting remote diagnostics** **Description** Sets the remote diagnostics. **Purpose** Used to establish communication between the machine and the service facility when a problem is encounted. **Method** 1. Enter the Service Setting menu. 2. Select [Remote Diag.Set.]. 3. Press the start key. 4. Select [On]. 5. Press the start key. The setting is set. 6. Select [Remote Diag. ID]. 7. Enter the prespecified remote diagnostics ID number (0000 to 9999) using the numeric keys. 8. Press the start key. The setting is set. **Completion** Press the stop key.

This page is intentionally left blank.

1-4-1 Paper misfeed detection

(1) Paper misfeed indication

When a paper misfeed occurs, the machine immediately stops printing and displays the paper misfeed message on the operation panel. To remove paper misfed in the machine, pull out the cassette, open the rear cover or paper conveying unit.

(2) Paper misfeed detection condition

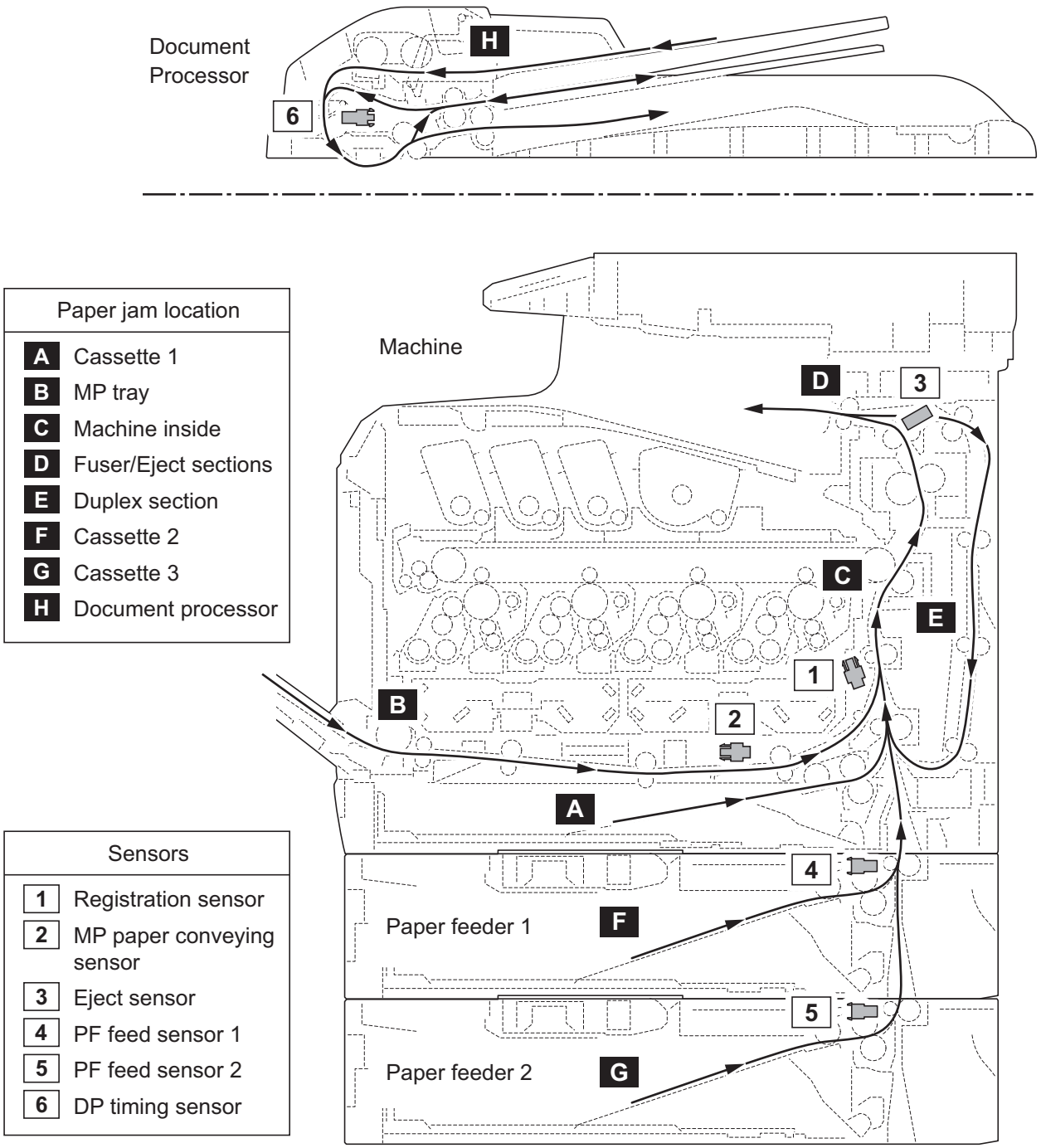

Figure 1-4-1 Paper jam location

Code	Contents	Conditions	Jam location*
0100	Controller sequence error	Secondary paper feed request given by the controller is unreachable.	C
0105	Registration sensor not detected	Activation of the registration sensor (on/off) is undetected for 90 s during printing.	-
0106	Controller sequence error	Paper feeding request for duplex printing given by the controller is unreachable.	E
0110	Inner tray open	The inner tray is opened during printing.	-
0111	Rear cover open	The rear cover is opened during printing.	-
0112	Front cover open	The waste toner cover is opened during printing.	-
0120	Controller sequence error	Paper feed request was received from the duplex section despite the absence of paper in the duplex section.	E
0121	Controller sequence error	The controller issued the duplex section a request for more pages than the duplex print cycle contains.	E
0211	Rear cover open (paper feeder 1)	The rear cover of paper feeder 1 is opened during printing.	-
0212	Rear cover open (paper feeder 2)	The rear cover of paper feeder 2 is opened during printing.	-
0501	No paper feed from cassette 1	The registration sensor (RS) does not turn on during paper feed from cassette.	A
0502	No paper feed from cassette 2	PF feed sensor 1 (PFFS1) does not turn on during paper feed from paper feeder 1.	F
0503	No paper feed from cassette 3	PF feed sensor 2 (PFFS2) does not turn on during paper feed from paper feeder 2.	G
0508	No paper feed from duplex section	The registration sensor (RS) does not turn on during paper feed from duplex section.	E
0509	No paper feed from MP tray	MP paper conveying sensor (MPPCS) does not turn on during paper feed from MP tray.	B
0511	Multiple sheets in cassette 1	The registration sensor (RS) does not turn off during paper feed from cassette.	A
0512	Multiple sheets in cassette 2	PF feed sensor 1 (PFFS1) does not turn off during paper feed from paper feeder 1.	F
0513	Multiple sheets in cassette 3	PF feed sensor 2 (PFFS2) does not turn off during paper feed from paper feeder 2.	G
0518	Multiple sheets in duplex section	The registration sensor (RS) does not turn off during paper feed from duplex section.	E
0519	Multiple sheets in MP tray	MP paper conveying sensor (MPPCS) does not turn off during paper feed from MP tray.	B

*: Refer to figure 1-4-2 for paper jam location (see page 1-4-1).

Code	Contents	Conditions	Jam location*
1020	MP feed sensor remaining jam	MP feed sensor (MPFS) is turned on when the power is turned on.	B
1403	PF feed sensor 1 non arrival jam	PF feed sensor 1 (PFFS1) does not turn on during paper feed from paper feeder 2.	F
1413	PF feed sensor 1 stay jam	PF feed sensor 1 (PFFS1) does not turn off during paper feed from paper feeder 2.	F
1420	PF feed sensor 1 remaining jam	PF feed sensor 1 (PFFS1) is turned on when the power is turned on.	F
1620	PF feed sensor 2 remaining jam	PF feed sensor 2 (PFFS2) is turned on when the power is turned on.	G
4002	Registration sensor non arrival jam	The registration sensor (RS) does not turn on during paper feed from paper feeder 1.	A
4003		The registration sensor (RS) does not turn on during paper feed from paper feeder 2.	A
4009		The registration sensor (RS) does not turn on during paper feed from MP tray.	A
4012	Registration sensor stay jam	The registration sensor (RS) does not turn off during paper feed from paper feeder 1.	C
4013		The registration sensor (RS) does not turn off during paper feed from paper feeder 2.	C
4019		The registration sensor (RS) does not turn off during paper feed from MP tray.	C
4020	Registration sensor remaining jam	The registration sensor (RS) is turned on when the power is turned on.	C
4201	Eject sensor non arrival jam	The eject sensor (ES) does not turn on during paper feed from cassette.	C
4202		The eject sensor (ES) does not turn on during paper feed from paper feeder 1.	C
4203		The eject sensor (ES) does not turn on during paper feed from paper feeder 2.	C
4208		The eject sensor (ES) does not turn on during paper feed from duplex section.	C
4209		The eject sensor (ES) does not turn on during paper feed from MP tray.	C

*: Refer to figure 1-4-2 for paper jam location (see page 1-4-1).

Code	Contents	Conditions	Jam location*
4211	Eject sensor stay jam	The eject sensor (ES) does not turn off during paper feed from cassette.	D
4212		The eject sensor (ES) does not turn off during paper feed from paper feeder 1.	D
4213		The eject sensor (ES) does not turn off during paper feed from paper feeder 2.	D
4218		The eject sensor (ES) does not turn off during paper feed from duplex section.	D
4219		The eject sensor (ES) does not turn off during paper feed from MP tray.	D
4220	Eject sensor remaining jam	The eject sensor (ES) is turned on when the power is turned on.	D
9000	No original feed	The DP timing sensor (DPTS) does not turn on within specified time during the first sheet feeding (Retry 5 times).	H
9001	An original jam in the original conveying section	DP timing sensor (DPTS) turns off within the specified time since the sensor turns on.	H
9003	An original jam in the original switchback section 1	During duplex switchback scanning, the DP timing sensor (DPTS) does not turn off within specified time.	H
9004	An original jam in the original switchback section 2	During duplex switchback scanning, the DP timing sensor (DPTS) does not turn on within specified time since original switchback operation starts.	H
9011	DP top cover open	The DP or DP top cover is opened during original feeding.	H
9401	An original jam in the original conveying section	The DP timing sensor (DPTS) does not turn off within specified time of the DP timing sensor (DPTS) turning on.	H

*: Refer to figure 1-4-2 for paper jam location (see page 1-4-1).

1-4-2 Self-diagnostic function

(1) Self-diagnostic function

This machine is equipped with self-diagnostic function. When a problem is detected, the machine stops printing and display an error message on the operation panel. An error message consists of a message prompting a contact to service personnel and a four-digit error code indicating the type of the error.

(2) Self diagnostic codes

If the part causing the problem was not supplied, use the unit including the part for replacement.

Code	Contents	Causes	Check procedures/ corrective measures
0030	**FAX control PWB system error** Processing with the fax software was disabled due to a hardware problem.	Defective FAX control PWB.	Replace the fax control PWB and check for correct operation. (see page 1-5-36).
0070	**FAX control PWB incompatible detection error** Abnormal detection of FAX control PWB incompatibility In the initial communication with the FAX control PWB, any normal communication command is not transmitted.	Defective FAX software.	Install the fax software.
		Defective FAX control PWB.	Replace the fax control PWB and check for correct operation. (see page 1-5-36).
0100	**Backup memory device error**	Defective flash memory.	Replace the main PWB and check for correct operation (see page 1-5-30).
		Defective main PWB.	Replace the main PWB and check for correct operation (see page 1-5-30).
0120	**MAC address data error** For data in which the MAC address is invalid.	Defective flash memory.	Replace the main PWB and check for correct operation (see page 1-5-30).
		Defective engine PWB.	Replace the engine PWB and check for correct operation (see page 1-5-27).
0130	**Backup memory read/write error (main PWB)**	Defective flash memory.	Replace the main PWB and check for correct operation (see page 1-5-30).
		Defective main PWB.	Replace the main PWB and check for correct operation (see page 1-5-30).

Code	Contents	Causes	Check procedures/ corrective measures
0140	**Backup memory data error (main PWB)**	Defective flash memory.	Replace the main PWB and check for correct operation (see page 1-5-30).
		Defective main PWB.	Replace the main PWB and check for correct operation (see page 1-5-30).
0150	**Engine PWB EEPROM error** Detecting engine PWB EEPROM communication error.	Improper installation engine PWB EEPROM.	Check the installation of the EEPROM and remedy if necessary.
		Defective engine PWB.	Replace the engine PWB and check for correct operation (see page 1-5-27).
		Device damage of EEPROM.	Contact the Service Administrative Division.
0170	**Billing counting error** A checksum error is detected in the main and engine backup memories for the billing counters.	Data damage of EEPROM.	Contact the Service Administrative Division.
		Defective PWB.	Replace the main PWB or the engine PWB and check for correct operation (see page 1-5-30, 1-5-27).
0180	**Machine number mismatch** Machine number of main and engine does not match.	Data damage of EEPROM.	Contact the Service Administrative Division.
0600	**Expanded memory (DIMM) installing error** The expansion memory modules (DIMM) are not correctly mounted.	Improper installation expanded memory (DIMM).	Check the installation of the expanded memory (DIMM).

Code	Contents	Causes	Check procedures/ corrective measures
0610	**Expanded memory (DIMM) error** The expansion memory modules (DIMM) mounted on the main PWB does not operate correctly.	Defective expanded memory (DIMM).	Replace the expanded memory (DIMM) and check for correct operation (see page 1-2-12).
		Defective main PWB.	Replace the main PWB and check for correct operation (see page 1-5-30).
0830	**FAX control PWB flash program area checksum error** A checksum error occurred with the program of the FAX control PWB.	Defective FAX software.	Install the fax software.
		Defective FAX control PWB.	Replace the FAX control PWB (see page 1-5-36).
0840	**Faults of RTC** The time is judged to go back based on the comparison of the RTC time and the current time or five years or more have passed.	The battery is disconnected from the main PWB.	Check visually and remedy if necessary
		Defective main PWB.	Replace the main PWB and check for correct operation (see page 1-5-30).
0870	**FAX control PWB to main PWB high capacity data transfer error** High-capacity data transfer between the FAX control PWB and the main PWB of the machine was not normally performed even if the data transfer was retried the specified times.	Improper installation FAX control PWB.	Reinstall the FAX control PWB (see page 1-5-36).
		Defective FAX control PWB or main PWB.	Replace the FAX control PWB or main PWB and check for correct operation (see page 1-5-36 or 1-5-30).
0920	**Fax file system error** The backup data is not retained for file system abnormality of flash memory of the FAX control PWB.	Defective FAX control PWB.	Replace the FAX control PWB and check for correct operation (see page 1-5-36).

Code	Contents	Causes	Check procedures/ corrective measures
0930	**EEPROM bus error**	Defective drum PWB (EEPROM).	Replace the drum unit (see page 1-5-21).
		Defective engine PWB (EEPROM).	Replace the engine PWB and check for correct operation (see page 1-5-27).
		Defective engine PWB.	Replace the engine PWB and check for correct operation (see page 1-5-27).
		Defective main PWB.	Replace the main PWB and check for correct operation (see page 1-5-30).
1010	**Lift motor error** When the lift motor is driven, the motor over-current detection signal is detected continuously for 50 times (5 s) at 100 ms intervals. After the lift motor is driven, the ON status of lift sensor cannot be detected for 8 s. The cassette installed confirmation message is displayed on the operation panel, and even if the cassette is opened and closed, the cassette installed confirmation message is displayed 5 times successively.	Defective bottom plate elevation mechanism in the cassette.	Check to see if the bottom plate can move smoothly and repair it if any problem is found.
		Defective connector cable or poor contact in the connector.	Reinsert the connector. Also check for continuity within the connector cable. If none, replace the cable. Lift motor and engine PWB (YC27)
		Defective drive transmission system of the lift motor.	Check if the gears rotate smoothly. If not, grease the bushes and gears. Check for broken gears and replace if any.
		Defective lift motor.	Replace the lift motor
		Defective engine PWB.	Replace the engine PWB and check for correct operation (see page 1-5-27).
1020	**PF lift motor error (paper feeder 1)** When the lift motor is driven, the motor over-current detection signal is detected continuously for 50 times (5 s) at 100 ms intervals. After the lift motor is driven, the ON status of lift sensor cannot be detected for 8 s. The cassette installed confirmation message is displayed on the operation panel, and even if the cassette is opened and closed, the cassette installed confirmation message is displayed 5 times successively.	Defective bottom plate elevation mechanism in the cassette.	Check to see if the bottom plate can move smoothly and repair it if any problem is found.
		Defective connector cable or poor contact in the connector.	Reinsert the connector. Also check for continuity within the connector cable. If none, replace the cable. PF lift motor and PF main PWB (YC7)
		Defective drive transmission system of the PF lift motor.	Check if the gears rotate smoothly. If not, grease the bushes and gears. Check for broken gears and replace if any.
		Defective PF lift motor.	Replace the PF lift motor
		Defective PF main PWB.	Replace the PF main PWB (Refer to the service manual for the paper feeder).

Code	Contents	Causes	Check procedures/ corrective measures
1030	**PF lift motor error (paper feeder 2)** When the lift motor is driven, the motor over-current detection signal is detected continuously for 50 times (5 s) at 100 ms intervals. After the lift motor is driven, the ON status of lift sensor cannot be detected for 8 s. The cassette installed confirmation message is displayed on the operation panel, and even if the cassette is opened and closed, the cassette installed confirmation message is displayed 5 times successively.	Defective bottom plate elevation mechanism in the cassette.	Check to see if the bottom plate can move smoothly and repair it if any problem is found.
		Defective connector cable or poor contact in the connector.	Reinsert the connector. Also check for continuity within the connector cable. If none, replace the cable. PF lift motor and PF main PWB (YC7)
		Defective drive transmission system of the PF lift motor.	Check if the gears rotate smoothly. If not, grease the bushes and gears. Check for broken gears and replace if any.
		Defective PF lift motor.	Replace the PF lift motor
		Defective PF main PWB.	Replace the PF main PWB (Refer to the service manual for the paper feeder).
1500	**PF heater 1 high temperature error (paper feeder 1)** A temperature higher than 75°C/167°F is detected.	Defective connector cable or poor contact in the connector.	Reinsert the connector. Also check for continuity within the connector cable. If none, replace the cable. PF fan motor 1 and PF main PWB (YC111)
		Shorted PF thermistor 1.	Replace the top heater unit (Refer to the service manual for the paper feeder).
		Defective PF fan motor 1.	Replace the top heater unit (Refer to the service manual for the paper feeder).
		Defective PF main PWB.	Replace the PF main PWB (Refer to the service manual for the paper feeder).
1510	**PF heater 2 high temperature error (paper feeder 1)** A temperature higher than 75°C/167°F is detected.	Defective connector cable or poor contact in the connector.	Reinsert the connector. Also check for continuity within the connector cable. If none, replace the cable. PF fan motor 2 and PF main PWB (YC111)
		Shorted PF thermistor 2.	Replace the side heater unit (Refer to the service manual for the paper feeder).
		Defective PF fan motor 2.	Replace the side heater unit (Refer to the service manual for the paper feeder).
		Defective PF main PWB.	Replace the PF main PWB (Refer to the service manual for the paper feeder).

Code	Contents	Causes	Check procedures/ corrective measures
1520	**PF heater 1 high temperature error (paper feeder 2)** A temperature higher than 75°C/167°F is detected.	Defective connector cable or poor contact in the connector.	Reinsert the connector. Also check for continuity within the connector cable. If none, replace the cable. PF fan motor 1 and PF main PWB (YC111)
		Shorted PF thermistor 1.	Replace the top heater unit (Refer to the service manual for the paper feeder).
		Defective PF fan motor 1.	Replace the top heater unit (Refer to the service manual for the paper feeder).
		Defective PF main PWB.	Replace the PF main PWB (Refer to the service manual for the paper feeder).
1530	**PF heater 2 high temperature error (paper feeder 2)** A temperature higher than 75°C/167°F is detected.	Defective connector cable or poor contact in the connector.	Reinsert the connector. Also check for continuity within the connector cable. If none, replace the cable. PF fan motor 2 and PF main PWB (YC111)
		Shorted PF thermistor 2.	Replace the side heater unit (Refer to the service manual for the paper feeder).
		Defective PF fan motor 2.	Replace the side heater unit (Refer to the service manual for the paper feeder).
		Defective PF main PWB.	Replace the PF main PWB (Refer to the service manual for the paper feeder).
1600	**PF heater 1 low temperature error (paper feeder 1)** An external temperature higher than + 5°C/+ 9°F is not detected when one minute elapses after PF heater 1 is turned on.	Defective connector cable or poor contact in the connector.	Reinsert the connector. Also check for continuity within the connector cable. If none, replace the cable. PF heater 1 and PF heater PWB (YC1) PF heater PWB (YC3) and PF main PWB (YC113) PF thermistor 1 and PF main PWB (YC114)
		PF thermistor 1 installed incorrectly.	Check the installation of the PF thermistor 1.
		Defective PF thermistor 1.	Replace the top heater unit (Refer to the service manual for the paper feeder).
		Broken PF heater 1.	Replace the top heater unit (Refer to the service manual for the paper feeder).
		Defective PF heater PWB or PF main PWB.	Replace the PF heater PWB or PF main PWB (Refer to the service manual for the paper feeder).

Code	Contents	Causes	Check procedures/ corrective measures
1610	**PF heater 2 low temperature error (paper feeder 1)** An external temperature higher than + 5°C/+ 9°F is not detected when one minute elapses after PF heater 2 is turned on.	Defective connector cable or poor contact in the connector.	Reinsert the connector. Also check for continuity within the connector cable. If none, replace the cable. PF heater 2 and PF heater PWB (YC2) PF heater PWB (YC3) and PF main PWB (YC113) PF thermistor 2 and PF main PWB (YC115)
		PF thermistor 2 installed incorrectly.	Check the installation of the PF thermistor 2.
		Defective PF thermistor 2.	Replace the side heater unit (Refer to the service manual for the paper feeder).
		Broken PF heater 2.	Replace the side heater unit (Refer to the service manual for the paper feeder).
		Defective PF heater PWB or PF main PWB.	Replace the PF heater PWB or PF main PWB (Refer to the service manual for the paper feeder).
1620	**PF heater 1 low temperature error (paper feeder 2)** An external temperature higher than + 5°C/+ 9°F is not detected when one minute elapses after PF heater 1 is turned on.	Defective connector cable or poor contact in the connector.	Reinsert the connector. Also check for continuity within the connector cable. If none, replace the cable. PF heater 1 and PF heater PWB (YC1) PF heater PWB (YC3) and PF main PWB (YC113) PF thermistor 1 and PF main PWB (YC114)
		PF thermistor 1 installed incorrectly.	Check the installation of the PF thermistor 1.
		Defective PF thermistor 1.	Replace the top heater unit (Refer to the service manual for the paper feeder).
		Broken PF heater 1.	Replace the top heater unit (Refer to the service manual for the paper feeder).
		Defective PF heater PWB or PF main PWB.	Replace the PF heater PWB or PF main PWB (Refer to the service manual for the paper feeder).

Code	Contents	Causes	Check procedures/ corrective measures
1630	**PF heater 2 low temperature error (paper feeder 2)** An external temperature higher than + 5°C/+ 9°F is not detected when one minute elapses after PF heater 2 is turned on.	Defective connector cable or poor contact in the connector.	Reinsert the connector. Also check for continuity within the connector cable. If none, replace the cable. PF heater 2 and PF heater PWB (YC2) PF heater PWB (YC3) and PF main PWB (YC113) PF thermistor 2 and PF main PWB (YC115)
		PF thermistor 2 installed incorrectly.	Check the installation of the PF thermistor 2.
		Defective PF thermistor 2.	Replace the side heater unit (Refer to the service manual for the paper feeder).
		Broken PF heater 2.	Replace the side heater unit (Refer to the service manual for the paper feeder).
		Defective PF heater PWB or PF main PWB.	Replace the PF heater PWB or PF main PWB (Refer to the service manual for the paper feeder).
1800	**Paper feeder communication error** Communication error between engine PWB and optional paper feeder.	Improper installation paper feeder.	Follow installation instruction carefully again.
		Defective connector cable or poor contact in the connector.	Reinsert the connector. Also check for continuity within the connector cable. If none, replace the cable. PF main PWB (YC3) and engine PWB (YC33)
		Defective engine PWB.	Replace the engine PWB and check for correct operation (see page 1-5-27).
		Defective PF main PWB.	Replace the PF main PWB (Refer to the service manual for the paper feeder).
2100	**Developing motor error** The developing motor ready input is not given for 5 s during the main motor is ON.	Defective connector cable or poor contact in the connector.	Reinsert the connector. Also check for continuity within the connector cable. If none, replace the cable. Developing motor and engine PWB (YC14)
		Defective drive transmission system of the developing motor.	Check if the rollers and gears rotate smoothly. If not, grease the bushes and gears. Check for broken gears and replace if any.
		Defective developing motor.	Replace the developing motor.
		Defective engine PWB.	Replace the engine PWB and check for correct operation (see page 1-5-27).

Code	Contents	Causes	Check procedures/ corrective measures
2200	**Drum motor error** The drum motor ready input is not given for 5 s during the drum motor is ON.	Defective connector cable or poor contact in the connector.	Reinsert the connector. Also check for continuity within the connector cable. If none, replace the cable. Drum motor and engine PWB (YC13)
		Defective drive transmission system of the drum motor.	Check if the rollers and gears rotate smoothly. If not, grease the bushes and gears. Check for broken gears and replace if any.
		Defective drum motor.	Replace the drum motor.
		Defective engine PWB.	Replace the engine PWB and check for correct operation (see page 1-5-27).
2330	**Fuser pressure release motor error** When the fuser pressure release motor is driven, the motor over-current detection signal is detected continuously for 8 times (800 ms) at 100 ms intervals.	Defective connector cable or poor contact in the connector.	Reinsert the connector. Also check for continuity within the connector cable. If none, replace the cable. Fuser pressure release motor and engine PWB (YC38)
		Defective drive transmission system of the fuser pressure release motor.	Check if the rollers and gears rotate smoothly. If not, grease the bushes and gears. Check for broken gears and replace if any.
		Defective fuser pressure release motor.	Replace the fuser pressure release motor.
		Defective engine PWB.	Replace the engine PWB and check for correct operation (see page 1-5-27).
2340	**Fuser pressure release motor time-out error** When the fuser pressure release motor is driven, the envelope switch (EVSW) is not detectable for 6 s.	Defective connector cable or poor contact in the connector.	Reinsert the connector. Also check for continuity within the connector cable. If none, replace the cable. Fuser pressure release motor and engine PWB (YC38)
		Defective drive transmission system of the fuser pressure release motor.	Check if the rollers and gears rotate smoothly. If not, grease the bushes and gears. Check for broken gears and replace if any.
		Defective fuser pressure release motor.	Replace the fuser pressure release motor.
		Defective engine PWB.	Replace the engine PWB and check for correct operation (see page 1-5-27).

Code	Contents	Causes	Check procedures/ corrective measures
2500	**Paper feed motor error** The drum motor ready input is not given for 5 s during the paper feed motor is ON.	Defective connector cable or poor contact in the connector.	Reinsert the connector. Also check for continuity within the connector cable. If none, replace the cable. Paper feed motor and engine PWB (YC3)
		Defective drive transmission system of the paper feed motor.	Check if the rollers and gears rotate smoothly. If not, grease the bushes and gears. Check for broken gears and replace if any.
		Defective paper feed motor.	Replace the paper feed motor.
		Defective engine PWB.	Replace the engine PWB and check for correct operation (see page 1-5-27).
2600	**PF paper feed motor error (paper feeder 1)** The drum motor ready input is not given for 2 s during the PF paper feed motor is ON.	Defective connector cable or poor contact in the connector.	Reinsert the connector. Also check for continuity within the connector cable. If none, replace the cable. PF paper feed motor and PF main PWB (YC6)
		Defective drive transmission system of the PF paper feed motor.	Check if the rollers and gears rotate smoothly. If not, grease the bushes and gears. Check for broken gears and replace if any.
		Defective PF paper feed motor.	Replace the PF paper feed motor.
		Defective PF main PWB.	Replace the PF main PWB (Refer to the service manual for the paper feeder).
2610	**PF paper feed motor error (paper feeder 2)** The drum motor ready input is not given for 2 s during the PF paper feed motor is ON.	Defective connector cable or poor contact in the connector.	Reinsert the connector. Also check for continuity within the connector cable. If none, replace the cable. PF paper feed motor and PF main PWB (YC6)
		Defective drive transmission system of the PF paper feed motor.	Check if the rollers and gears rotate smoothly. If not, grease the bushes and gears. Check for broken gears and replace if any.
		Defective PF paper feed motor.	Replace the PF paper feed motor.
		Defective PF main PWB.	Replace the PF main PWB (Refer to the service manual for the paper feeder).

Code	Contents	Causes	Check procedures/ corrective measures
2730	**Developing release motor error** When the developing release motor is driven, the motor over-current detection signal is detected continuously for 8 times (800 ms) at 100 ms intervals.	Defective connector cable or poor contact in the connector.	Reinsert the connector. Also check for continuity within the connector cable. If none, replace the cable. Developing release motor and engine PWB (YC35)
		Defective drive transmission system of the developing release motor.	Check if the rollers and gears rotate smoothly. If not, grease the bushes and gears. Check for broken gears and replace if any.
		Defective developing release motor.	Replace the developing release motor.
		Defective engine PWB.	Replace the engine PWB and check for correct operation (see page 1-5-27).
2740	**Developing release motor time-out error** When the developing release motor is driven, the developing release switch (DEVRSW) is not detectable for 1 s.	Defective connector cable or poor contact in the connector.	Reinsert the connector. Also check for continuity within the connector cable. If none, replace the cable. Developing release motor and engine PWB (YC35)
		Defective drive transmission system of the developing release motor.	Check if the rollers and gears rotate smoothly. If not, grease the bushes and gears. Check for broken gears and replace if any.
		Defective developing release motor.	Replace the developing release motor.
		Defective engine PWB.	Replace the engine PWB and check for correct operation (see page 1-5-27).
2820	**Fuser motor error** The fuser motor ready input is not given for 5 s during the fuser motor is ON.	Defective connector cable or poor contact in the connector.	Reinsert the connector. Also check for continuity within the connector cable. If none, replace the cable. Fuser motor and engine PWB (YC15)
		Defective drive transmission system of the fuser motor.	Check if the rollers and gears rotate smoothly. If not, grease the bushes and gears. Check for broken gears and replace if any.
		Defective fuser motor.	Replace the fuser motor.
		Defective engine PWB.	Replace the engine PWB and check for correct operation (see page 1-5-27).

Code	Contents	Causes	Check procedures/ corrective measures
3100	**ISU home position error** The home position is not correct when the power is turned on or at the start of copying using the table.	Defective connector cable or poor contact in the connector.	Reinsert the connector. Also check for continuity within the connector cable. If none, replace the cable. Home position sensor and CCD PWB (YC3) CCD PWB (YC1) and main PWB (YC8) ISU motor and main PWB (YC36)
		Defective home position sensor.	Replace the home position sensor.
		Defective ISU motor.	Replace the ISU motor.
		Defective CCD PWB.	Replace the scanner unit (see page 1-5-48).
		Defective main PWB.	Replace the main PWB and check for correct operation (see page 1-5-30).
3200	**Exposure lamp error** The exposure lamp does not turn on when power is on. The lamp's lumosity does not stabilize in one minute after power is on.	Defective connector cable or poor contact in the connector.	Reinsert the connector. Also check for continuity within the connector cable. If none, replace the cable. LED PWB and LED driving PWB (YC2) LED driving PWB (YC1) and CCD PWB (YC3) CCD PWB (YC1) and main PWB (YC8)
		Defective LED PWB.	Replace the scanner unit (see page 1-5-48).
		Defective LED driving PWB or CCD PWB.	Replace the scanner unit (see page 1-5-48).
		Defective main PWB.	Replace the main PWB and check for correct operation (see page 1-5-30).

Code	Contents	Causes	Check procedures/ corrective measures
3500	**Communication error between scanner and ASIC** An error code is detected.	Defective connector cable or poor contact in the connector.	Reinsert the connector. Also check for continuity within the connector cable. If none, replace the cable. CCD PWB (YC1) and main PWB (YC8)
		Defective CCD PWB.	Replace the scanner unit (see page 1-5-48).
		Defective main PWB.	Replace the main PWB and check for correct operation (see page 1-5-30).
4001	**Polygon motor KM error** The polygon motor KM ready input is not given for 10 s during the polygon motor is ON.	Defective connector cable or poor contact in the connector.	Reinsert the connector. Also check for continuity within the connector cable. If none, replace the cable. Laser scanner unit KM and engine PWB (YC31)
		Defective polygon motor KM.	Replace the laser scanner unit KM (see page 1-5-45).
		Defective engine PWB.	Replace the engine PWB and check for correct operation (see page 1-5-27).
4002	**Polygon motor CY error** The polygon motor CY ready input is not given for 10 s during the polygon motor is ON.	Defective connector cable or poor contact in the connector.	Reinsert the connector. Also check for continuity within the connector cable. If none, replace the cable. Laser scanner unit CY and engine PWB (YC31)
		Defective polygon motor CY.	Replace the laser scanner unit CY (see page 1-5-45).
		Defective engine PWB.	Replace the engine PWB and check for correct operation (see page 1-5-27).
4201	**Laser output error (black)** The pin photo signal is not output from PD PWB K for one second while laser is emitted.	Defective connector cable or poor contact in the connector.	Reinsert the connector. Also check for continuity within the connector cable. If none, replace the cable. APC PWB K and engine PWB (YC31)
		Defective APC PWB K.	Replace the laser scanner unit KM (see page 1-5-45).
		Defective PD PWB K.	Replace the laser scanner unit KM (see page 1-5-45).
		Defective engine PWB.	Replace the engine PWB and check for correct operation (see page 1-5-27).

Code	Contents	Causes	Check procedures/ corrective measures
4202	**Laser output error (cyan)** The pin photo signal is not output from PD PWB C for one second while laser is emitted.	Defective connector cable or poor contact in the connector.	Reinsert the connector. Also check for continuity within the connector cable. If none, replace the cable. APC PWB C and engine PWB (YC32)
		Defective APC PWB C.	Replace the laser scanner unit CY (see page 1-5-45).
		Defective PD PWB C.	Replace the laser scanner unit CY (see page 1-5-45).
		Defective engine PWB.	Replace the engine PWB (see page 1-5-27).
4203	**Laser output error (magenta)** The pin photo signal is not output from PD PWB M for one second while laser is emitted.	Defective connector cable or poor contact in the connector.	Reinsert the connector. Also check for continuity within the connector cable. If none, replace the cable. APC PWB M and engine PWB (YC31)
		Defective APC PWB M.	Replace the laser scanner unit KM (see page 1-5-45).
		Defective PD PWB M.	Replace the laser scanner unit KM (see page 1-5-45).
		Defective engine PWB.	Replace the engine PWB (see page 1-5-27).
4204	**Laser output error (yellow)** The pin photo signal is not output from PD PWB Y for one second while laser is emitted.	Defective connector cable or poor contact in the connector.	Reinsert the connector. Also check for continuity within the connector cable. If none, replace the cable. APC PWB Y and engine PWB (YC32)
		Defective APC PWB Y.	Replace the laser scanner unit CY (see page 1-5-45).
		Defective PD PWB Y.	Replace the laser scanner unit CY (see page 1-5-45).
		Defective engine PWB.	Replace the engine PWB (see page 1-5-27).
4600	**LSU cleaning motor error** When the LSU cleaning motor is driven, the motor over-current detection signal is detected continuously for 50 times (5 s) at 100 ms intervals.	Defective connector cable or poor contact in the connector.	Reinsert the connector. Also check for continuity within the connector cable. If none, replace the cable. LSU cleaning motor and engine PWB (YC36)
		Defective drive transmission system of the LSU cleaning motor.	Check if the rollers and gears rotate smoothly. If not, grease the bushes and gears. Check for broken gears and replace if any.
		Defective LSU cleaning motor.	Replace the LSU cleaning motor.
		Defective engine PWB.	Replace the engine PWB and check for correct operation (see page 1-5-27).

Code	Contents	Causes	Check procedures/ corrective measures
4700	**VIDEO ASIC device error**	Defective connector cable or poor contact in the connector.	Reinsert the connector. Also check for continuity within the connector cable. If none, replace the cable. Main PWB (YC39) and relay PWB (YC3) Relay PWB (YC2, 4) and engine PWB (YC8, 9)
		Defective main PWB or engine PWB.	Replace the main PWB or the engine PWB and check for correct operation (see page 1-5-30, 1-5-27).
5301	**Broken cleaning lamp K wire** When the cleaning lamp K is driven, the lamp over-current detection signal is detected continuously for 10 times (1 s) at 100 ms intervals.	Defective connector cable or poor contact in the connector.	Reinsert the connector. Also check for continuity within the connector cable. If none, replace the cable. Drum unit K and Drum relay PWB (YC2) Drum relay PWB (YC1) and engine PWB (YC34)
		Defective cleaning lamp K.	Replace the drum unit K. (see page 1-5-21).
		Defective engine PWB.	Replace the engine PWB and check for correct operation (see page 1-5-27).
5302	**Broken cleaning lamp C wire** When the cleaning lamp C is driven, the lamp over-current detection signal is detected continuously for 10 times (1 s) at 100 ms intervals.	Defective connector cable or poor contact in the connector.	Reinsert the connector. Also check for continuity within the connector cable. If none, replace the cable. Drum unit C and Drum relay PWB (YC4) Drum relay PWB (YC1) and engine PWB (YC34)
		Defective cleaning lamp C.	Replace the drum unit C. (see page 1-5-21).
		Defective engine PWB.	Replace the engine PWB and check for correct operation (see page 1-5-27).
5303	**Broken cleaning lamp M wire** When the cleaning lamp M is driven, the lamp over-current detection signal is detected continuously for 10 times (1 s) at 100 ms intervals.	Defective connector cable or poor contact in the connector.	Reinsert the connector. Also check for continuity within the connector cable. If none, replace the cable. Drum unit M and Drum relay PWB (YC3) Drum relay PWB (YC1) and engine PWB (YC34)
		Defective cleaning lamp M.	Replace the drum unit M. (see page 1-5-21).
		Defective engine PWB.	Replace the engine PWB and check for correct operation (see page 1-5-27).

Code	Contents	Causes	Check procedures/ corrective measures
5304	**Broken cleaning lamp Y wire** When the cleaning lamp Y is driven, the lamp over-current detection signal is detected continuously for 10 times (1 s) at 100 ms intervals.	Defective connector cable or poor contact in the connector.	Reinsert the connector. Also check for continuity within the connector cable. If none, replace the cable. Drum unit Y and Drum relay PWB (YC5) Drum relay PWB (YC1) and engine PWB (YC34)
		Defective cleaning lamp Y.	Replace the drum unit Y. (see page 1-5-21).
		Defective engine PWB.	Replace the engine PWB and check for correct operation (see page 1-5-27).
6000	**Broken fuser heater wire** The detected temperature of fuser thermistor does not rise 1°C/1.8°F after the fuser heater has been turned on continuously for 10 s in warming up. The fuser temperature does not reach 100°C/212°F after the fuser heater has been turned on continuously for 30 s in warming up. The detected temperature of fuser thermistor does not reach the specified temperature (ready indication temperature) after the fuser heater has been turned on continuously for 60 s in warming up. The detected temperature of fuser thermistor does not rise 1°C/1.8°F after the fuser heater has been turned on continuously for 10 s during printing.	Defective connector cable or poor contact in the connector.	Reinsert the connector. Also check for continuity within the connector cable. If none, replace the cable. Fuser heater and power source PWB (YC102) Fuser unit and eject PWB (YC3) Eject PWB (YC1) and engine PWB (YC19)
		Deformed connector pin.	See page 1-4-21.
		Defective triac.	See page 1-4-21.
		Fuser thermostat triggered.	Reinsert the fuser unit (see page 1-5-26).
		Broken fuser heater wire.	Replace the fuser unit (see page 1-5-26).
		Defective engine PWB.	Replace the engine PWB and check for correct operation (see page 1-5-27).
6020	**Abnormally high fuser thermistor temperature** The fuser thermistor detects a temperature higher than 240°C/464°F. By the activation of the high temperature error detection circuit (230°C/446°F or more) of fuser thermistor, the illumination of fuser heater was forcibly turned off and 10 s has elapsed.	Deformed connector pin.	See page 1-4-21.
		Defective triac.	See page 1-4-21.
		Shorted fuser thermistor.	Replace the fuser unit (see page 1-5-26).
		Defective engine PWB.	Replace the engine PWB and check for correct operation (see page 1-5-27).

Code	Contents	Causes	Check procedures/ corrective measures
6030	**Broken fuser thermistor wire** Input from fuser thermistor is 3 or less (A/D value) continuously for 1 s.	Defective connector cable or poor contact in the connector.	Reinsert the connector. Also check for continuity within the connector cable. If none, replace the cable. Fuser unit and eject PWB (YC3) Eject PWB (YC1) and engine PWB (YC19)
		Deformed connector pin.	See page 1-4-21.
		Defective triac.	See page 1-4-21.
		Broken fuser thermistor wire.	Replace the fuser unit (see page 1-5-26).
		Fuser thermostat triggered.	Reinsert the fuser unit (see page 1-5-26).
		Broken fuser heater wire.	Replace the fuser unit (see page 1-5-26).
		Defective engine PWB.	Replace the engine PWB and check for correct operation (see page 1-5-27).
6000/ 6020/ 6030 Combined	**Broken fuser heater wire** **Abnormally high fuser thermistor temperature** **Broken fuser thermistor wire**	Deformed connector pin.	If the I/F connector pins of the fuser unit and the main unit are deformed owing to foreign matters, such as paper dusts, replace the connectors or the units including the connectors.
		Defective triac.	Remove the power cord and check that the resistance between terminals T1 and T2 of the triac TRA51 is of several Mega-Ohms and not shorted (see figure 1-4-4). If failed, replace the power source PWB (see page 1-5-29).

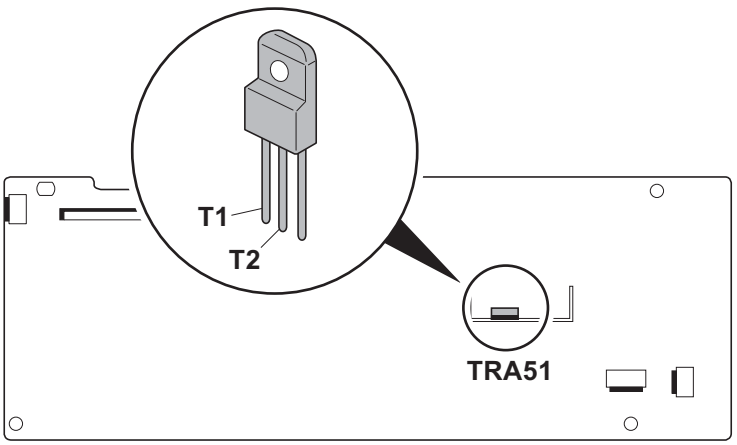

Power source PWB

Figure 1-4-2

Code	Contents	Causes	Check procedures/ corrective measures
6400	**Zero-cross signal error** The zero-cross signal does not reach the engine PWB for more than 1 s.	Defective connector cable or poor contact in the connector.	Reinsert the connector. Also check for continuity within the connector cable. If none, replace the cable. Power source PWB (YC103) and relay PWB (YC1) Relay PWB (YC4) and engine PWB (YC9)
		Defective power source PWB or engine PWB.	Replace the power source PWB or the engine PWB and check for correct operation (see page 1-5-29, 1-5-27).
7001	**Toner motor K error** When the toner motor K is driven, the motor over-current detection signal is detected continuously for 50 times (5 s) at 100 ms intervals.	Defective connector cable or poor contact in the connector.	Reinsert the connector. Also check for continuity within the connector cable. If none, replace the cable. Toner motor K and engine PWB (YC23)
		Defective drive transmission system of the toner motor K.	Check if the rollers and gears rotate smoothly. If not, grease the bushes and gears. Check for broken gears and replace if any.
		Defective toner motor K.	Replace the toner motor K.
		Defective engine PWB.	Replace the engine PWB and check for correct operation (see page 1-5-27).
7002	**Toner motor C error** When the toner motor C is driven, the motor over-current detection signal is detected continuously for 50 times (5 s) at 100 ms intervals.	Defective connector cable or poor contact in the connector.	Reinsert the connector. Also check for continuity within the connector cable. If none, replace the cable. Toner motor C and engine PWB (YC25)
		Defective drive transmission system of the toner motor C.	Check if the rollers and gears rotate smoothly. If not, grease the bushes and gears. Check for broken gears and replace if any.
		Defective toner motor C.	Replace the toner motor C.
		Defective engine PWB.	Replace the engine PWB and check for correct operation (see page 1-5-27).
7003	**Toner motor M error** When the toner motor M is driven, the motor over-current detection signal is detected continuously for 50 times (5 s) at 100 ms intervals.	Defective connector cable or poor contact in the connector.	Reinsert the connector. Also check for continuity within the connector cable. If none, replace the cable. Toner motor M and engine PWB (YC24)
		Defective drive transmission system of the toner motor M.	Check if the rollers and gears rotate smoothly. If not, grease the bushes and gears. Check for broken gears and replace if any.
		Defective toner motor M.	Replace the toner motor M.
		Defective engine PWB.	Replace the engine PWB and check for correct operation (see page 1-5-27).

Code	Contents	Causes	Check procedures/ corrective measures
7004	**Toner motor Y error** When the toner motor Y is driven, the motor over-current detection signal is detected continuously for 50 times (5 s) at 100 ms intervals.	Defective connector cable or poor contact in the connector.	Reinsert the connector. Also check for continuity within the connector cable. If none, replace the cable. Toner motor Y and engine PWB (YC26)
		Defective drive transmission system of the toner motor Y.	Check if the rollers and gears rotate smoothly. If not, grease the bushes and gears. Check for broken gears and replace if any.
		Defective toner motor Y.	Replace the toner motor Y.
		Defective engine PWB.	Replace the engine PWB and check for correct operation (see page 1-5-27).
7401	**Developing unit K non-installing error** No density detection signal is output from toner sensor K in developing unit K.	Defective connector cable or poor contact in the connector.	Reinsert the connector. Also check for continuity within the connector cable. If none, replace the cable. Developing unit K and Drum relay PWB (YC6) Drum relay PWB (YC1) and engine PWB (YC34)
		Defective toner sensor K.	Replace the developing unit K (see page 1-5-19).
		Defective engine PWB.	Replace the engine PWB and check for correct operation (see page 1-5-27).
7402	**Developing unit C non-installing error** No density detection signal is output from toner sensor C in developing unit C.	Defective connector cable or poor contact in the connector.	Reinsert the connector. Also check for continuity within the connector cable. If none, replace the cable. Developing unit C and Drum relay PWB (YC10) Drum relay PWB (YC1) and engine PWB (YC34)
		Defective toner sensor C.	Replace the developing unit C (see page 1-5-19).
		Defective engine PWB.	Replace the engine PWB and check for correct operation (see page 1-5-27).
7403	**Developing unit M non-installing error** No density detection signal is output from toner sensor M in developing unit M.	Defective connector cable or poor contact in the connector.	Reinsert the connector. Also check for continuity within the connector cable. If none, replace the cable. Developing unit M and Drum relay PWB (YC7) Drum relay PWB (YC1) and engine PWB (YC34)
		Defective toner sensor M.	Replace the developing unit M (see page 1-5-19).
		Defective engine PWB.	Replace the engine PWB and check for correct operation (see page 1-5-27).

Code	Contents	Causes	Check procedures/ corrective measures
7404	**Developing unit Y non-installing error** No density detection signal is output from toner sensor Y in developing unit Y.	Defective connector cable or poor contact in the connector.	Reinsert the connector. Also check for continuity within the connector cable. If none, replace the cable. Developing unit Y and Drum relay PWB (YC13) Drum relay PWB (YC1) and engine PWB (YC34)
		Defective toner sensor Y.	Replace the developing unit Y (see page 1-5-19).
		Defective engine PWB.	Replace the engine PWB and check for correct operation (see page 1-5-27).
7411	**Drum unit K non- installing error** The EEPROM of drum PWB K does not communicate normally.	Installation of incompatible drum unit K.	Install drum unit K compatible with the specifications to the machine.
		Defective connector cable or poor contact in the connector.	Reinsert the connector. Also check for continuity within the connector cable. If none, replace the cable. Drum unit K and Drum relay PWB (YC2) Drum relay PWB (YC1) and engine PWB (YC34)
		Defective drum PWB K.	Replace the drum unit K (see page 1-5-21).
		Defective engine PWB.	Replace the engine PWB and check for correct operation (see page 1-5-27).
7412	**Drum unit C non- installing error** The EEPROM of drum PWB C does not communicate normally.	Installation of incompatible drum unit C.	Install drum unit C compatible with the specifications to the machine.
		Defective connector cable or poor contact in the connector.	Reinsert the connector. Also check for continuity within the connector cable. If none, replace the cable. Drum unit C and Drum relay PWB (YC4) Drum relay PWB (YC1) and engine PWB (YC34)
		Defective drum PWB C.	Replace the drum unit C (see page 1-5-21).
		Defective engine PWB.	Replace the engine PWB and check for correct operation (see page 1-5-27).

Code	Contents	Causes	Check procedures/ corrective measures
7413	**Drum unit M non- installing error** The EEPROM of drum PWB M does not communicate normally.	Installation of incompatible drum unit M.	Install drum unit M compatible with the specifications to the machine.
		Defective connector cable or poor contact in the connector.	Reinsert the connector. Also check for continuity within the connector cable. If none, replace the cable. Drum unit M and Drum relay PWB (YC3) Drum relay PWB (YC1) and engine PWB (YC34)
		Defective drum PWB M.	Replace the drum unit M (see page 1-5-21).
		Defective engine PWB.	Replace the engine PWB and check for correct operation (see page 1-5-27).
7414	**Drum unit Y non- installing error** The EEPROM of drum PWB Y does not communicate normally.	Installation of incompatible drum unit Y.	Install drum unit Y compatible with the specifications to the machine.
		Defective connector cable or poor contact in the connector.	Reinsert the connector. Also check for continuity within the connector cable. If none, replace the cable. Drum unit Y and Drum relay PWB (YC5) Drum relay PWB (YC1) and engine PWB (YC34)
		Defective drum PWB Y.	Replace the drum unit Y (see page 1-5-21).
		Defective engine PWB.	Replace the engine PWB and check for correct operation (see page 1-5-27).
9500			Contact the Service Administrative Division.
9510			
9520			
9530	**Backup data error** The serial number of the machine written on the EEPROM of the engine PWB differs with that is written on both the flash memory of the engine PWB and the EEPROM of the drum PWB as a backup.	Replacing both the engine PWB and the drum unit at the same time.	Check that the machine operates properly by reverting the engine controller and the drum unit to the old ones. To replace the engine PWB and the drum unit at the same time, turn on the machine after replacing either one. Check that the machine operates properly and then turn off the machine. Replace the other and turn on the machine to check that the machine operates properly. Be sure to replace one by one.

Code	Contents	Causes	Check procedures/ corrective measures
F000	**Main PWB - operation panel PWB communication error**	Defective main PWB.	Turn the main power switch off/on to restart the machine. If the error is not resolved, replace main PWB (see page 1-5-30).
		Defective operation panel PWB.	Replace the operation panel PWB and check for correct operation.
F010	**Main PWB checksum error**	Defective main PWB.	Turn the main power switch off/on to restart the machine. If the error is not resolved, replace main PWB (see page 1-5-30).
F020	**Main PWB RAM checksum error**	Defective main memory (RAM) on the main PWB.	Turn the main power switch off/on to restart the machine. If the error is not resolved, replace main PWB (see page 1-5-30).
		Defective expanded memory (DIMM).	Replace the expanded memory (DIMM) (see page 1-2-12).
F040	**Main PWB - print engine communication error**	Defective main PWB.	Turn the main power switch off/on to restart the machine. If the error is not resolved, replace main PWB (see page 1-5-30).
			Replace the engine PWB and check for correct operation (see page 1-5-27).
F041	**Main PWB - scanner engine communication error**	Defective main PWB.	Turn the main power switch off/on to restart the machine. If the error is not resolved, replace main PWB (see page 1-5-30).
F050	**Print engine ROM checksum error**	Defective engine PWB.	Turn the main power switch off/on to restart the machine. If the error is not resolved, replace engine PWB (see page 1-5-27).
F051	**Scanner engine ROM checksum error**	Defective engine PWB.	Turn the main power switch off/on to restart the machine. If the error is not resolved, replace engine PWB (see page 1-5-27).
F278	**Power supply in drive system error**	Main power switch was turned off without using the power key, or a power failure has occurred.	Turn on power. (To switch off power, first press the power key until the main power indicator goes off, then turn the main power switch off.)

1-4-3 Image formation problems

If the part causing the problem was not supplied, use the unit including the part for replacement.

(1) No image appears (entirely white).

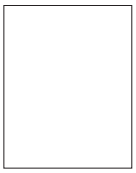

See page 1-4-28

(2) No image appears (entirely black).

See page 1-4-28

(3) A specific color is printed solid.

See page 1-4-29

(4) The back side gets dirty.

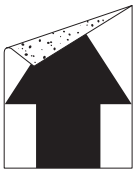

See page 1-4-29

(5) Image is too light.

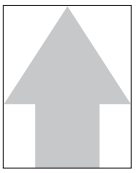

See page 1-4-29

(6) The background is colored.

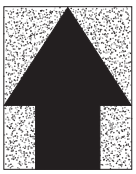

See page 1-4-30

(7) White streaks are printed vertically.

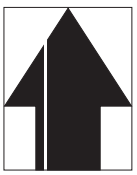

See page 1-4-30

(8) Black streaks are printed vertically.

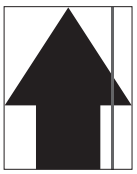

See page 1-4-30

(9) Streaks are printed horizontally.

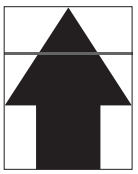

See page 1-4-31

(10) Spots are printed.

See page 1-4-31

(11) The leading edge of image begins to print too early or too late.

See page 1-4-31

(12) Paper is wrinkled.

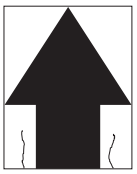

See page 1-4-31

(13) Offset occurs.

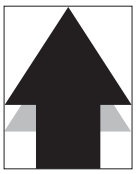

See page 1-4-32

(14) Part of image is missing.

See page 1-4-32

(15) Fusing is loose.

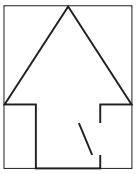

See page 1-4-32

(16) Colors are printed offset to each other.

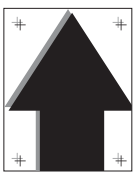

See page 1-4-33

(1) No image appears (entirely white).

Print example	Causes		Check procedures/corrective measures
	Defective transfer bias output.	Defective connector cable or poor contact in the connector.	Reinsert the connector. Also check for continuity within the connector cable. If none, replace the cable. High voltage PWB and engine PWB (YC11)
		Defective high voltage PWB.	Replace the high voltage PWB (see page 1-5-35).
		Defective engine PWB.	Replace the engine PWB (see page 1-5-27).
	Defective developing bias output.	Defective connector cable or poor contact in the connector.	Reinsert the connector. Also check for continuity within the connector cable. If none, replace the cable. High voltage PWB and engine PWB (YC11)
		Defective high voltage PWB.	Replace the high voltage PWB (see page 1-5-35).
		Defective engine PWB.	Replace the engine PWB (see page 1-5-27).
	No LSU laser is output.	Defective laser scanner unit.	Replace the laser scanner unit KM/CY (see page 1-5-45).
		Defective engine PWB.	Replace the engine PWB (see page 1-5-27).

(2) No image appears (entirely black).

Print example	Causes		Check procedures/corrective measures
	No main charging.	Defective connector cable or poor contact in the connector.	Reinsert the connector. Also check for continuity within the connector cable. If none, replace the cable. High voltage PWB and engine PWB (YC11)
		Defective charger roller unit.	Replace the drum unit (see page 1-5-21).
		Defective high voltage PWB.	Replace the high voltage PWB (see page 1-5-35).
		Defective engine PWB.	Replace the engine PWB (see page 1-5-27).
	Exposure lamp fails to light.	Defective connector cable or poor contact in the connector.	Reinsert the connector. Also check for continuity within the connector cable. If none, replace the cable. Exposure lamp and inverter PWB (CN2) Inverter PWB (CN1) and CCD PWB (YC3) CCD PWB (YC1) and main PWB (YC8)
		Defective inverter PWB or CCD PWB.	Replace the scanner unit (see page 1-5-48).
		Defective main PWB.	Replace the main PWB (see page 1-5-30).
	The laser is activated simultaneously for all colors.	Defective laser scanner unit.	Replace the laser scanner unit KM/CY (see page 1-5-45).

(3) A specific color is printed solid.

Print example	Causes	Check procedures/corrective measures
	Defective charger roller unit which corresponds to the color causing the problem.	Replace the drum unit for the color that causes an error (see page 1-5-21).
	Laser of laser scanner unit for solid color printing is ON. Defective laser scanner unit.	Replace the laser scanner unit KM/CY (see page 1-5-45).

(4) The back side gets dirty.

Print example	Causes	Check procedures/corrective measures
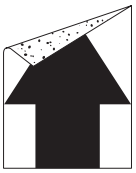	Dirty secondary transfer roller.	Clean the secondary transfer roller.
	Dirty paper conveying path.	Clean the paper conveying path.
	Dirty heat roller and press roller.	Clean the heat roller and press roller.

(5) Image is too light.

Print example	Causes		Check procedures/corrective measures
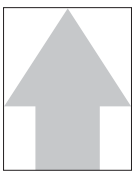	Defective developing bias output.	Defective developing unit.	Replace the developing unit for the color that causes an error (see page 1-5-19).
		Defective high voltage PWB.	Replace the high voltage PWB (see page 1-5-35).
		Defective engine PWB.	Replace the engine PWB (see page 1-5-27).
	Defective drum unit.		Decrease the surface potential by performing the main charger adjustment (see page 1-3-92). When the problem is not cleared, replace the drum unit (see page 1-5-21).
	Defective transfer bias output.	Defective high voltage PWB.	Replace the high voltage PWB (see page 1-5-35).
		Defective engine PWB.	Replace the engine (see page 1-5-27).
	Defective color calibration.		Perform the color calibration (Refer to operation guide).
	Insufficient toner.		If the display shows the message requesting toner replenishment, replace the container.
	Insufficient agitation of toner container.		Shake the toner container vertically approximately 10 times.
	Paper damp.		Check the paper storage conditions, replace the paper.

(6) The background is colored.

Print example	Causes		Check procedures/corrective measures
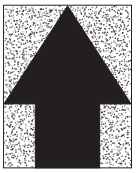	Defective color calibration.		Perform the color calibration (Refer to operation guide).
	Defective developing bias output.	Defective developing unit.	Replace the developing unit for the color that causes an error (see page 1-5-19).
		Defective high voltage PWB.	Replace the high voltage PWB (see page 1-5-35).
		Defective engine PWB.	Replace the engine PWB (see page 1-5-27).
	Defective drum surface charging.	Defective drum unit.	Replace the drum unit (see page 1-5-21).
		Defective high voltage PWB.	Replace the high voltage PWB (see page 1-5-35).
		Defective engine PWB.	Replace the engine PWB (see page 1-5-27).

(7) White streaks are printed vertically.

Print example	Causes	Check procedures/corrective measures
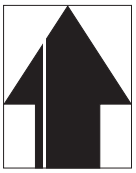	Foreign object in one of the developing units.	Replace the developing unit for the color that causes an error (see page 1-5-19).
	Adhesion of soiling to transfer belt.	Clean the transfer belt. Replace the intermediate transfer unit if it is extremely dirty (see page 1-5-22).
	Adhesion of soiling to transfer roller.	Clean the transfer roller. Replace the transfer roller if it is extremely dirty (see page 1-5-25).
	Dirty LSU dust shield glass.	Perform the LSU dust shield glass cleaning.

(8) Black streaks are printed vertically.

Print example	Causes	Check procedures/corrective measures
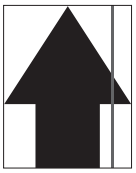	Dirty contact glass.	Clean the contact glass.
	Dirty slit glass.	Clean the slit glass.
	Dirty or flawed drum.	Perform the drum surface refreshing (see page 1-3-91). Flawed drum. Replace the drum unit (see page 1-5-21).
	Deformed or worn cleaning blade in the drum unit.	Replace the drum unit (see page 1-5-21).
	Worn primary transfer belt.	Replace the intermediate transfer unit (see page 1-5-22).
	Defective transfer roller.	Replace the transfer roller (see page 1-5-25).

(9) Streaks are printed horizontally.

Print example	Causes	Check procedures/corrective measures
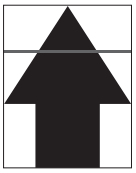	Dirty or flawed drum.	Perform the drum surface refreshing (see page 1-3-91). Flawed drum. Replace the drum unit (see page 1-5-21).
	Dirty developing section.	Clean any part contaminated with toner in the developing section.
	Poor contact of grounding terminal of drum unit.	Check the installation of the drum unit. If it operates incorrectly, replace it (see page 1-5-21).

(10) Spots are printed.

Print example	Causes	Check procedures/corrective measures
	Dirty contact glass.	Clean the contact glass.
	Dirty or flawed drum.	Perform the drum surface refreshing (see page 1-3-91). Flawed drum. Replace the drum unit (see page 1-5-21).
	Deformed or worn cleaning blade in the drum unit.	Replace the drum unit (see page 1-5-21).
	Flawed developing roller.	Replace the developing unit (see page 1-5-19).
	Dirty heat roller and press roller.	Clean the heat roller and press roller.

(11) The leading edge of image begins to print too early or too late.

Print example	Causes	Check procedures/corrective measures
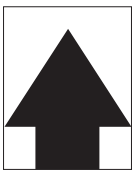	Paper feed clutch or registration clutch operating incorrectly.	Check the installation of the clutch. If it operates incorrectly, replace it.

(12) Paper is wrinkled.

Print example	Causes	Check procedures/corrective measures
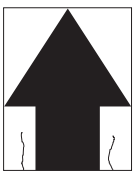	Paper curled.	Check the paper storage conditions.
	Paper damp.	Check the paper storage conditions.

(13) Offset occurs.

Print example	Causes	Check procedures/corrective measures
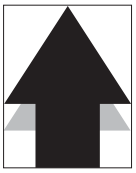	Defective drum surface charging.	Perform the drum surface refreshing (see page 1-3-91). When the problem is not cleared, increase the surface potential by performing the main charger adjustment (see page 1-3-92).
	Deformed or worn cleaning blade in the drum unit.	Replace the drum unit (see page 1-5-21).
	Defective transfer belt cleaning.	Replace the intermediate transfer unit (see page 1-5-22).
	Defective fuser unit.	Replace the fuser unit (see page 1-5-26).
	Wrong types of paper.	Check if the paper meets specifications. Replace paper.

(14) Part of image is missing.

Print example	Causes	Check procedures/corrective measures
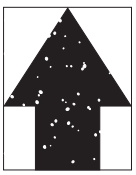	Paper damp.	Check the paper storage conditions.
	Paper creased.	Replace the paper.
	Drum condensation.	Perform the drum surface refreshing (see page 1-3-91).
	Dirty or flawed drum.	Perform the drum surface refreshing (see page 1-3-91). Flawed drum. Replace the drum unit (see page 1-5-21).
	Dirty transfer belt.	Clean the transfer belt. Replace the intermediate transfer unit if it is extremely dirty (see page 1-5-22).
	Dirty transfer roller.	Clean the transfer roller. Replace the transfer roller if it is extremely dirty (see page 1-5-25).

(15) Fusing is loose.

Print example	Causes	Check procedures/corrective measures
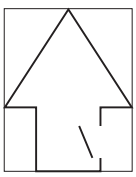	Wrong types of paper.	Check if the paper meets specifications, replace paper.
	Flawed heat roller or press roller.	Replace the fuser unit (see page 1-5-26).

(16) Colors are printed offset to each other.

Print example	Causes	Check procedures/corrective measures
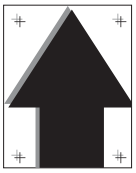	Defective color calibration.	Perform the color calibration (refer to operation guide).
	Slip the mirror position of laser scanner unit.	Perform the normal color registration. When the problem is not cleared, perform the detail color registration adjustment (refer to operation guide).

1-4-4 Electric problems

If the part causing the problem was not supplied, use the unit including the part for replacement.
Troubleshooting to each failure must be in the order of the numbered symptoms.

Problem	Causes	Check procedures/corrective measures
(1) The machine does not operate when the main power switch is turned on.	1. No electricity at the power outlet.	Measure the input voltage.
	2. The power cord is not plugged in properly.	Check the contact between the power plug and the outlet.
	3. The inner tray is not closed completely.	Check the inner tray.
	4. Broken power cord.	Check for continuity. If none, replace the cord.
	5. Defective main power switch.	Check for continuity across the contacts. If none, replace the power source PWB (see page 1-5-29).
	6. Defective interlock switch.	Check for continuity across the contacts of interlock switch. If none, replace the power source PWB (see page 1-5-29).
	7. Defective power source PWB.	Replace the power source PWB (see page 1-5-29).
(2) Duplex motor does not operate.	1. Defective connector cable or poor contact in the connector.	Reinsert the connector. Also check for continuity within the connector cable. If none, replace the cable. Duplex motor and engine PWB (YC37)
	2. Defective drive transmission system.	Check if the rollers and gears rotate smoothly. If not, grease the bushes and gears. Check for broken gears and replace if any.
	3. Defective motor.	Replace the duplex motor.
	4. Defective PWB.	Replace the engine PWB and check for correct operation (see page 1-5-27).
(3) Right fan motor does not operate.	1. Defective connector cable or poor contact in the connector.	Reinsert the connector. Also check for continuity within the connector cable. If none, replace the cable. Right fan motor and main PWB (YC42)
	2. Defective motor.	Replace the right fan motor.
	3. Defective PWB.	Replace the main PWB and check for correct operation (see page 1-5-30).
(4) Left fan motor does not operate.	1. Defective connector cable or poor contact in the connector.	Reinsert the connector. Also check for continuity within the connector cable. If none, replace the cable. Left fan motor and engine PWB (YC29)
	2. Defective motor.	Replace the left fan motor.
	3. Defective PWB.	Replace the engine PWB and check for correct operation (see page 1-5-27).

Problem	Causes	Check procedures/corrective measures
(5) Controller fan motor does not operate.	1. Defective connector cable or poor contact in the connector.	Reinsert the connector. Also check for continuity within the connector cable. If none, replace the cable. Controller fan motor and main PWB (YC41)
	2. Defective motor.	Replace the controller fan motor.
	3. Defective PWB.	Replace the main PWB and check for correct operation (see page 1-5-30).
(6) Fuser fan motor does not operate.	1. Defective connector cable or poor contact in the connector.	Reinsert the connector. Also check for continuity within the connector cable. If none, replace the cable. Fuser fan motor and engine PWB (YC40)
	2. Defective motor.	Replace the fuser fan motor.
	3. Defective PWB.	Replace the engine PWB and check for correct operation (see page 1-5-27).
(7) Container fan motor does not operate.	1. Defective connector cable or poor contact in the connector.	Reinsert the connector. Also check for continuity within the connector cable. If none, replace the cable. Container fan motor and engine PWB (YC28)
	2. Defective motor.	Replace the container fan motor.
	3. Defective PWB.	Replace the engine PWB and check for correct operation (see page 1-5-27).
(8) ISU motor does not operate.	1. Defective connector cable or poor contact in the connector.	Reinsert the connector. Also check for continuity within the connector cable. If none, replace the cable. ISU motor and main PWB (YC36)
	2. Defective drive transmission system.	Check if the rollers and gears rotate smoothly. If not, grease the bushes and gears. Check for broken gears and replace if any.
	3. Defective motor.	Replace the ISU motor.
	4. Defective PWB.	Replace the main PWB and check for correct operation (see page 1-5-30).
(9) Paper feed clutch does not operate.	1. Defective connector cable or poor contact in the connector.	Reinsert the connector. Also check for continuity within the connector cable. If none, replace the cable. Paper feed clutch and engine PWB (YC3)
	2. Defective clutch.	Replace the paper feed clutch.
	3. Defective PWB.	Replace the engine PWB and check for correct operation (see page 1-5-27).
(10) MP feed clutch does not operate.	1. Defective connector cable or poor contact in the connector.	Reinsert the connector. Also check for continuity within the connector cable. If none, replace the cable. MP feed clutch and engine PWB (YC3)
	2. Defective clutch.	Replace the MP feed clutch.
	3. Defective PWB.	Replace the engine PWB and check for correct operation (see page 1-5-27).

Problem	Causes	Check procedures/corrective measures
(11) Registration clutch does not operate.	1. Defective connector cable or poor contact in the connector.	Reinsert the connector. Also check for continuity within the connector cable. If none, replace the cable. Registration clutch and engine PWB (YC3)
	2. Defective clutch.	Replace the registration clutch.
	3. Defective PWB.	Replace the engine PWB and check for correct operation (see page 1-5-27).
(12) Middle clutch does not operate.	1. Defective connector cable or poor contact in the connector.	Reinsert the connector. Also check for continuity within the connector cable. If none, replace the cable. Middle clutch and engine PWB (YC3)
	2. Defective clutch.	Replace the middle clutch.
	3. Defective PWB.	Replace the engine PWB and check for correct operation (see page 1-5-27).
(13) MP solenoid does not operate.	1. Defective connector cable or poor contact in the connector.	Reinsert the connector. Also check for continuity within the connector cable. If none, replace the cable. MP solenoid and engine PWB (YC4)
	2. Defective solenoid.	Replace the MP solenoid.
	3. Defective PWB.	Replace the engine PWB and check for correct operation (see page 1-5-27).
(14) The message requesting paper to be loaded is shown when paper is present on the cassette.	1. Defective connector cable or poor contact in the connector.	Reinsert the connector. Also check for continuity within the connector cable. If none, replace the cable. Cassette PWB (YC1) and engine PWB (YC21)
	2. Deformed actuator of the paper sensor.	Check visually and replace if necessary.
	3. Defective paper sensor.	Replace the cassette PWB.
	4. Defective PWB.	Replace the engine PWB and check for correct operation (see page 1-5-27).
(15) The message requesting paper to be loaded is shown when paper is present on the MP tray.	1. Defective connector cable or poor contact in the connector.	Reinsert the connector. Also check for continuity within the connector cable. If none, replace the cable. MP paper sensor and engine PWB (YC16)
	2. Deformed actuator of the MP paper sensor.	Check visually and replace if necessary.
	3. Defective MP paper sensor.	Replace the MP paper sensor.
	4. Defective PWB.	Replace the engine PWB and check for correct operation (see page 1-5-27).
(16) The size of paper on the cassette is not displayed correctly.	1. Defective connector cable or poor contact in the connector.	Reinsert the connector. Also check for continuity within the connector cable. If none, replace the cable. Cassette size switch and engine PWB (YC17)
	2. Defective cassette size switch.	Replace the cassette size switch.
	3. Defective PWB.	Replace the engine PWB and check for correct operation (see page 1-5-27).

Problem	Causes	Check procedures/corrective measures
(17) A paper jam in the paper feed, paper conveying or eject section is indicated when the main power switch is turned on.	1. A piece of paper torn from paper is caught around registration sensor, MP paper conveying sensor or eject sensor.	Check visually and remove it, if any.
	2. Defective registration sensor.	Replace the registration sensor.
	3. Defective MP paper conveying sensor.	Replace the MP paper conveying sensor.
	4. Defective eject sensor.	Replace the eject PWB.
(18) A message indicating cover open is displayed when the inner tray or rear cover is closed.	1. Deformed actuator of the interlock switch.	Check visually and replace if necessary.
	2. Defective interlock switch.	Replace the interlock switch.
(19) DP paper feed motor does not operate.	1. Defective connector cable or poor contact in the connector.	Reinsert the connector. Also check for continuity within the connector cable. If none, replace the cable. DP paper feed motor and DP drive PWB (YC3) DP drive PWB (YC1) and main PWB (YC32)
	2. Defective drive transmission system.	Check if the rollers and gears rotate smoothly. If not, grease the bushes and gears. Check for broken gears and replace if any.
	3. Defective motor.	Replace the DP paper feed motor.
	4. Defective PWB.	Replace the DP drive PWB or main PWB and check for correct operation (see page 1-5-87, 1-5-30).
(20) DP paper feed clutch does not operate.	1. Defective connector cable or poor contact in the connector.	Reinsert the connector. Also check for continuity within the connector cable. If none, replace the cable. DP paper feed clutch and DP drive PWB (YC6) DP drive PWB (YC8) and main PWB (YC32)
	2. Defective clutch.	Replace the DP paper feed clutch.
	3. Defective PWB.	Replace the DP drive PWB or main PWB and check for correct operation (see page 1-5-87, 1-5-30).
(21) DP pressure solenoid does not operate.	1. Defective connector cable or poor contact in the connector.	Reinsert the connector. Also check for continuity within the connector cable. If none, replace the cable. DP pressure solenoid and DP drive PWB (YC4) DP drive PWB (YC8) and main PWB (YC32)
	2. Defective solenoid.	Replace the DP pressure solenoid.
	3. Defective PWB.	Replace the DP drive PWB or main PWB and check for correct operation (see page 1-5-87, 1-5-30).

Problem	Causes	Check procedures/corrective measures
(22) DP switchback solenoid does not operate.	1. Defective connector cable or poor contact in the connector.	Reinsert the connector. Also check for continuity within the connector cable. If none, replace the cable. DP switchback solenoid and DP drive PWB (YC5) DP drive PWB (YC8) and main PWB (YC32)
	2. Defective solenoid.	Replace the DP switchback solenoid.
	3. Defective PWB.	Replace the DP drive PWB or main PWB and check for correct operation (see page 1-5-87, 1-5-30).
(23) An original jams when the main power switch is turned on.	1. A piece of paper torn from an original is caught around the DP timing sensor.	Check visually and remove it, if any.
	2. Defective DP timing sensor.	Replace the DP timing sensor.
(24) A message indicating cover open is displayed when the DP top cover is closed.	1. Defective connector cable or poor contact in the connector.	Reinsert the connector. Also check for continuity within the connector cable. If none, replace the cable. DP open/close sensor and DP drive PWB (YC2) DP drive PWB (YC8) and main PWB (YC32)
	2. Defective DP open/close sensor.	Replace the DP open/close sensor.

1-4-5 Mechanical problems

If the part causing the problem was not supplied, use the unit including the part for replacement.

Problem	Causes/check procedures	Corrective measures
(1) No primary paper feed.	Check if the surfaces of the following rollers are dirty with paper powder. Pickup roller Paper feed roller MP paper feed roller	Clean with isopropyl alcohol.
	Check if the following rollers is deformed. Pickup roller Paper feed roller MP paper feed roller	Check visually and replace any deformed (see page 1-5-15, 1-5-17).
	Defective paper feed clutch installation.	Check visually and remedy if necessary.
(2) No secondary paper feed.	Check if the surfaces of the following rollers are dirty with paper powder. Front registration roller Rear registration roller	Clean with isopropyl alcohol.
	Defective registration clutch installation.	Check visually and remedy if necessary.
(3) Skewed paper feed.	Paper width guide in a cassette installed incorrectly.	Check the paper width guide visually and remedy or replace if necessary.
(4) Multiple sheets of paper are fed.	Check if the paper is excessively curled.	Change the paper.
	Paper is loaded incorrectly.	Load the paper correctly.
	Check if the retard roller is worn.	Replace the retard roller if it is worn (see page 1-5-13).
(5) Paper jams.	Check if the paper is excessively curled.	Change the paper.
	Check if the contact between the front and rear registration rollers is correct.	Check visually and remedy if necessary.
	Check if the heat roller or press roller is extremely dirty or deformed.	Check visually and replace the fuser unit (see page 1-5-26).
(6) Abnormal noise is heard.	Check if the rollers, pulleys and gears operate smoothly.	Grease the bushes and gears.
	Check if the following clutches are installed correctly. Paper feed clutch MP feed clutch Registration clutch Middle clutch	Check visually and remedy if necessary.
	Check if the following fan motors are installed correctly. Left fan motor Right fan motor Controller fan motor Fuser fan motor Container fan motor	Check visually and remedy if necessary.

Problem	Causes/check procedures	Corrective measures
(7) No primary original feed.	Check if the surfaces of the following pulleys are dirty with paper powder. DP forwarding pulley DP feed pulley	Clean with isopropyl alcohol.
	Check if the following pulleys is deformed. DP forwarding pulley DP feed pulley	Check visually and replace any deformed (see page 1-5-82).
(8) Multiple sheets of original are fed.	Original is not correctly set.	Set the original correctly.
	Check if the DP separation pad is worn.	Replace the DP separation pad if it is worn (see page 1-5-86).
(9) Originals jam.	Originals outside the specifications are used.	Use only originals conforming to the specifications.
	Check if the surfaces of the following pulleys are dirty with paper powder. DP forwarding pulley DP feed pulley	Clean with isopropyl alcohol.
	Check if the contact between the conveying roller and conveying pulley is correct.	Check visually and remedy if necessary.
	Check if the contact between the eject roller and eject pulley is correct.	Check visually and remedy if necessary.
	Check if the contact between the switchback roller and switchback pulley is correct.	Check visually and remedy if necessary.

1-4-6 Send error code

This section describes the scanning errors and descriptions, preventive actions, as well as corrective actions.
Error codes not described here could fall within software errors.
If such an error is encountered, turn power off then on, and advise the service representative.

(1) Scan to SMB error codes

Code	Contents	Check procedures/corrective measures
1101	Host destined does not exist on the network.	1. Confirm the destined host. 2. Confirm thedevice's network parameters. 3. Confirm the parameters of the network to which the device is connected are correct.
1102	Login to the host has failed.	1. Confirm user name and password. 2. Confirm the parameters of the network to which the device is connected are correct. 3. Check the host if the folder is properly shared.
1103	Destined host, folder, and/or file names are invalid.	1. Check illegal characters are not contained within these names. 2. Check the name of the folder and files conform with the naming syntax. 3. Confirm destined host and folder.
1105	SMB protocol is not enabled.	1. Confirm device's SMB protocols.
2101	Login to the host has failed.	1. Confirm the destined host. 2. Confirm that the LAN cable is properly connected to the device. 3. Check the SMB port number. 4. Confirm the device's network parameters. 5. Confirm the parameters of the network to which the device is connected are correct.
2201	Writing scanned data has failed.	1. Check the file name to save the scanned data. 2. Confirm the device's network parameters. 3. Confirm the parameters of the network to which the device is connected are correct.
2203	No response from the host during a certain period of time.	1. Confirm the network parameters the device is connected. 2. Confirm that the LAN cable is properly connected to the device.

(2) Scan to FTP error codes

Code	Contents	Check procedures/corrective measures
1101	FTP server does not exist on the network.	1. Check the FTP server name. 2. Confirm device's network parameters. 3. Confirm the parameters of the network to which the device is connected are correct.
1102	Login to the FTP server has failed.	1. Confirm user name and password. 2. Check the FTP server name.
1103	Destined folder is invalid.	1. Check that the illegal characters are not contained within these names. 2. Check the FTP server name.
1105	FTP protocol is not enabled.	1. Confirm device's FTP protocols.
1131	Initializing TLS has failed.	1. Confirm device's security parameters.
1132	TLS negotiation has failed.	1. Confirm device's security parameters. 2. Check the FTP server name.
2101	Access to the FTP server has failed.	1. Check the FTP server name. 2. Confirm that the LAN cable is properly connected to the device. 3. Check the FTP port number. 4. Confirm device's network parameters. 5. Confirm the network parameters the device is connected. 6. Check the FTP server name.
2102	Access to the FTP server has failed. (Connection timeout)	1. Check the FTP server name. 2. Check the FTP port number. 3. Confirm device's network parameters. 4. Confirm the network parameters the device is connected. 5. Check the FTP server name.
2103	The server cannot establish communication.	1. Check the FTP server name. 2. Check the FTP port number. 3. Confirm device's network parameters. 4. Confirm the network parameters the device is connected. 5. Check the FTP server name.
2201	Connection with the FTP server has failed.	1. Confirm device's network parameters. 2. Confirm the network parameters the device is connected. 3. Confirm destined folder. 4. Check the FTP server name.
2202	Connection with the FTP server has failed. (Timeout)	1. Confirm device's network parameters. 2. Confirm the network parameters the device is connected.
2203	No response from the server during a certain period of time.	1. Confirm device's network parameters. 2. Confirm the network parameters the device is connected.

Code	Contents	Check procedures/corrective measures
2231	Connection with the FTP server has failed. (FTPS communication)	1. Confirm device's network parameters. 2. Confirm the network parameters the device is connected.
3101	FTP server responded with an error.	1. Confirm device's network parameters. 2. Confirm the network parameters the device is connected. 3. Check the FTP server.

(3) Scan to E-mail error codes

Code	Contents	Check procedures/corrective measures
1101	SMTP/POP3 server does not exist on the network.	1. Check the SMTP/POP3 server name. 2. Confirm device's network parameters. 3. Confirm the parameters of the network to which the device is connected are correct.
1102	Login to the SMTP/POP3 server has failed.	1. Confirm user name and password. 2. Check the SMTP/POP3 server.
1104	The domain the destined address belongs is prohibited by scanning restriction.	1. Confirm device's SMTP parameters.
1105	SMTP protocol is not enabled.	1. Confirm device's SMTP protocols.
1106	Sender’s address is not specified.	1. Confirm device's SMTP protocols.
2101	Connection to the SMTP/POP3 server has failed.	1. Check the SMTP/POP3 server name. 2. Confirm that the LAN cable is properly connected to the device. 3. Check the SMTP/POP3 port number. 4. Confirm device's network parameters. 5. Confirm the network parameters the device is connected. 6. Check the SMTP/POP3 server.
2102	Connection to the SMTP/POP3 server has failed. (Connection timeout)	1. Check the SMTP/POP3 server name. 2. Check the SMTP/POP3 port number. 3. Confirm device's network parameters. 4. Confirm the network parameters the device is connected. 5. Check the SMTP/POP3 server.
2103	The server cannot establish communication.	1. Check the SMTP/POP3 server name. 2. Check the SMTP/POP3 port number. 3. Confirm device's network parameters. 4. Confirm the network parameters the device is connected. 5. Check the SMTP/POP3 server.
2201	Connection to the SMTP/POP3 server has failed.	1. Confirm device's network parameters. 2. Confirm the network parameters the device is connected.
2202	Connection to the SMTP/POP3 server has failed. (Timeout)	1. Confirm device's network parameters. 2. Confirm the network parameters the device is connected.
2204	The size of scanning exceeded its limit.	1. Confirm device's network parameters.
3101	SMTP/POP3 server responded with an error.	1. Confirm device's network parameters. 2. Confirm the network parameters the device is connected. 3. Check the SMTP/POP3 server.
3102	Error: Server Response.	1. Check the SMTP/POP3 server. 2. Wait a minute and trye again.

Code	Contents	Check procedures/corrective measures
3201	No SMTP authentication is found.	1. Check the SMTP server. 2. The device supports SMTP authentication services including CRAM-MD5, DIGEST-MD5, PLAIN and LOGIN.
4803	Failed to establish the SSL session.	1. Verify the self certificate of the device. 2. Check the server certificate of the SMTP/POP3 server. 3. Check the SMTP/POP3 configuration of the device and the SMTP/POP3 server.

1-4-7 Error codes

(1) Error code

Error codes are listed on the communication reports, activity report, etc. The codes consist of an error code indication U followed by a 5-digit number. (Error codes for V34 communication errors start with an E indication, followed by five digits.)
The upper three of the five digits indicate general classification of the error and its cause, while the lower two indicate the detailed classification. Items for which detailed classification is not necessary have 00 as the last two digits.

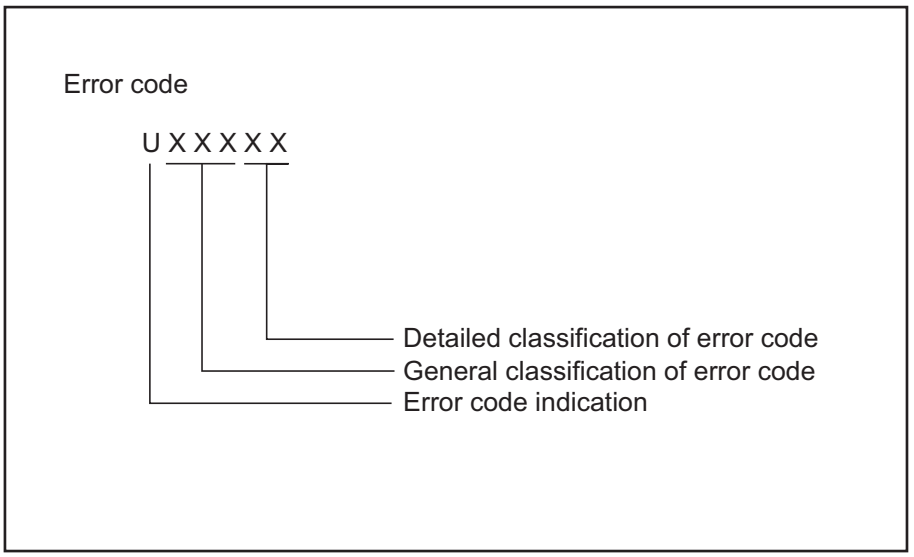

Figure 1-4-3

(2) Table of general classification

Error code	Description
U00000	No response or busy after the set number of redials.
U00100	Transmission was interrupted by a press of the stop/clear key.
U00200	Reception was interrupted by a press of the stop/clear key.
U00300	Recording paper on the destination unit has run out during transmission.
U004XX	A connection was made but interrupted during handshake with the receiver unit (refer to 1-4-49 U004XX error code table).
U006XX	Communication was interrupted because of a machine problem (refer to 1-4-49 U006XX error code table).
U00700	Communication was interrupted because of a problem in the destination unit.
U008XX	A page transmission error occurred in G3 mode (refer to 1-4-49 U008XX error code table).
U009XX	A page reception error occurred in G3 mode (refer to 1-4-49 U009XX error code table).
U010XX	Transmission in G3 mode was interrupted by a signal error (refer to 1-4-50 U010XX error code table).
U011XX	Reception in G3 mode was interrupted by a signal error (refer to 1-4-51 U011XX error code table).
U01400	An invalid one-touch key was specified during communication.
U01500	A communication error occurred when calling in V.8 mode.
U01600	A communication error occurred when called in V.8 mode.
U017XX	A communication error occurred before starting T.30 protocol during transmission in V.34 mode (refer to 1-4-52 U017XX error code table).
U018XX	A communication error occurred before starting T.30 protocol during reception in V.34 mode (refer to 1-4-52 U018XX error code table).
U03000	No document was present in the destination unit when polling reception started.
U03200	In interoffice subaddress-based bulletin board reception, data was not stored in the box specified by the destination unit.
U03300	In polling reception from a unit of our make, operation was interrupted due to a mismatch in permit ID or telephone number. Or, in interoffice subaddress-based bulletin board reception, operation was interrupted due to a mismatch in permit ID or telephone number.
U03400	Polling reception was interrupted because of a mismatch in individual numbers (destination unit is either of our make or by another manufacturer).
U03500	In interoffice subaddress-based bulletin board reception, the specified Subaddress confidential box number was not registered in the destination unit.
U03600	An interoffice subaddress-based bulletin board reception was interrupted because of a mismatch in the specified subaddress confidential box number.
U03700	Interoffice subaddress-based bulletin board reception failed because the destination unit had no subaddress-based bulletin board transmission capability, or data was not stored in any subaddress confidential box in the destination unit.
U04000	In interoffice subaddress-based transmission mode, the specified subaddress box number was not registered in the destination unit.

Error code	Description
U04100	Subaddress-based transmission failed because the destination unit had no subaddress-based reception capability.
U04200	In encrypted transmission, the specified encryption box was not registered in the destination unit.
U04300	Encrypted transmission failed because the destination unit had no encrypted communication capability.
U04400	Encrypted transmission was interrupted because encryption keys did not agree.
U04500	Encrypted reception was interrupted because of a mismatch in encryption keys.
U05100	Password check transmission or restricted transmission was interrupted because the permit ID's did not agree with.
U05200	Password check reception or restricted reception was interrupted because the permit ID's did not match, the rejected FAX number's did match, or the destination receiver did not return its phone number.
U05300	The password check reception or the restricted reception was interrupted because the permitted numbers did not match, the rejected numbers did match, or the machine in question did not acknowledge its phone number.
U14000	Memory overflowed during confidential reception. Or, in subaddress-based confidential reception, memory overflowed.
U14100	In interoffice subaddress-based transmission, memory overflowed in the destination unit.
U19000	Memory overflowed during memory reception.
U19100	Memory overflowed in the destination unit during transmission.
U19300	Transmission failed because an error occurred during JBIG encoding.

(2-1) U004XX error code table: Interrupted phase B

Error code	Description
U00430	Polling request was received but interrupted because of a mismatch in permit number. Or, subaddress-based bulletin board transmission request was received but interrupted because of a mismatch in permit ID in the transmitting unit.
U00431	An subaddress-based bulletin board transmission was interrupted because the specified subaddress confidential box was not registered.
U00432	An subaddress-based bulletin board transmission was interrupted because of a mismatch in Subaddress confidential box numbers.
U00433	Subaddress-based bulletin board transmission request was received but data was not present in the subaddress confidential box.
U00440	Subaddress-based confidential reception was interrupted because the specified subaddress box was not registered.
U00450	The destination transmitter disconnected because the permit ID's did not agree with while the destination transmitter is in password-check transmission or restricted transmission.
U00460	Encrypted reception was interrupted because the specified encryption box number was not registered.
U00462	Encrypted reception was interrupted because the encryption key for the specified encryption box was not registered.

(2-2) U006XX error code table: Problems with the unit

Error code	Description
U00601	Document jam or the document length exceeds the maximum.
U00613	Image writing section problem
U00656	Data was not transmitted to a modem error.
U00690	System error.

(2-3) U008XX error code table: Page transmission error

Error code	Description
U00800	A page transmission error occurred because of reception of a RTN or PIN signal.
U00811	A page transmission error reoccurred after retry of transmission in the ECM mode.

(2-4) U009XX error code table: Page reception error

Error code	Description
U00900	An RTN or PIN signal was transmitted because of a page reception error.
U00910	A page reception error remained after retry of transmission in the ECM mode.

(2-5) U010XX error code table: G3 transmission

Error code	Description
U01000	An FTT signal was received for a set number of times after TCF signal transmission at 2400 bps. Or, an RTN signal was received in response to a Q signal (excluding EOP) after transmission at 2400 bps.
U01001	Function of the unit differs from that indicated by a DIS signal.
U01016	An MCF signal was received but no DIS signal was received after transmission of an EOM signal, and T1 timeout was detected.
U01019	No relevant signal was received after transmission of a CNC signal, and the preset number of command retransfers was exceeded (between units of our make).
U01020	No relevant signal was received after transmission of a CTC signal, and the preset number of command retransfers was exceeded (ECM).
U01021	No relevant signal was received after transmission of an EOR.Q signal, and the preset number of command retransfers was exceeded (ECM).
U01022	No relevant signal was received after transmission of an RR signal, and the preset number of command retransfers was exceeded (ECM).
U01028	T5 time-out was detected during ECM transmission (ECM).
U01052	A DCN signal was received after transmission of an RR signal (ECM).
U01080	A PIP signal was received after transmission of a PPS.NULL signal.
U01092	During transmission in V.34 mode, communication was interrupted because of an impossible combination of the symbol speed and communication speed.
U01093	A DCN or other inappropriate signal was received during phase B of transmission.
U01094	The preset number of command retransfers for DCS/NSS signals was exceeded during phase B of transmission.
U01095	No relevant signal was received after transmission of a PPS (Q) signal during phase D of transmission, and the preset number of command transfers was exceeded.
U01096	A DCN signal or invalid command was received during phase D of transmission.
U01097	The preset number of command retransfers was exceeded after transmission of an RR signal or no response.

(2-6) U011XX error code table: G3 reception

Error code	Description
U01100	Function of the unit differs from that indicated by a DCS signal.
U01101	Function of the unit (excl. communication mode select) differs from that indicated by an NSS signal.
U01102	A DTC (NSC) signal was received when no transmission data was in the unit.
U01110	No response after transmission of a DIS signal.
U01111	No response after transmission of a DTC (NSC) signal.
U01113	No response after transmission of an FTT signal.
U01125	No response after transmission of a CNS signal (between units of our make).
U01129	No response after transmission of an SPA signal (short protocol).
U01141	A DCN signal was received after transmission of a DTC signal.
U01143	A DCN signal was received after transmission of an FTT signal.
U01155	A DCN signal was received after transmission of an SPA signal (short protocol).
U01160	During message reception, transmission time exceeded the maximum transmission time per line.
U01162	Reception was aborted due to a modem malfunction during message reception.
U01191	Communication was interrupted because an error occurred during an image data reception sequence in the V.34 mode.
U01193	There was no response, or a DCN signal or invalid command was received, during phase C/D of reception.
U01194	A DCN signal was received during phase B of reception.
U01195	No message was received during phase C of reception.
U01196	Error line control was exceeded and a decoding error occurred for the message being received.

(2-7) U017XX error code table: V.34 transmission

Error code	Description
U01700	A communication error occurred in phase 2 (line probing).
U01720	A communication error occurred in phase 4 (modem parameter exchange).
U01721	Operation was interrupted due to the absence of a common communication speed between units.

U01700: A communication error that occurs at the transmitting unit in the period after transmission of INFO0 before entering phase 3 (primary channel equivalent device training). For example, INFO0/A/Abar (B/Bbar, for polling transmission)/INFOh was not detected.

U01720: A communication error that occurs at the transmitting unit in the period after initiating the control channel before entering the T.30 process. For example, PPh/ALT/MPh/E was not detected.

U01721: In the absence of a common communication speed between units (including when an impossible combination of communication speed and symbol speed occurs) after MPh exchange; 1) a DCN signal was received from the destination unit, and the line was cut; or 2) a DIS (NSF, CSI) signal was received from the destination unit and, in response to the signal, the unit transmitted a DCN signal, and the line was cut.

(2-8) U018XX error code table: V.34 reception

Error code	Description
U01800	A communication error occurred in phase 2 (line probing).
U01810	A communication error occurred in phase 3 (primary channel equivalent device training).
U01820	A communication error occurred in phase 4 (modem parameter exchange).
U01821	Operation was interrupted due to the absence of a common communication speed between units.

U01800: A communication error that occurs at the receiver unit in the period after transmission of INFO0 before entering phase 3 (primary channel equivalent device training). For example, INFO0/B/Bbar (A/Abar, for polling reception)/probing tone was not detected.

U01810: A communication error that occurs at the receiver unit in phase 3 (primary channel equivalent device training). For example, S/Sbar/PP/TRN was not detected.

U01820: A communication error that occurs at the receiver unit in the period after initiating the control channel before entering the T.30 process. For example, PPh/ALT/MPh/E was not detected.

U01821: In the absence of a common communication speed between units (including when an impossible combination of communication speed and symbol speed occurs) after MPh exchange, a DCN signal was transmitted to the destination unit and the line was cut.

1-5-1 Precautions for assembly and disassembly

(1) Precautions

Before starting disassembly, press the Power key on the operation panel to off. Make sure that the Power lamp is off before turning off the main power switch. And then unplug the power cable from the wall outlet.
When the fax kit is installed, be sure to disconnect the modular code before starting disassembly.
When handling PWBs (printed wiring boards), do not touch parts with bare hands.
The PWBs are susceptible to static charge.
Do not touch any PWB containing ICs with bare hands or any object prone to static charge.
When removing the hook of the connector, be sure to release the hook.
Take care not to get the cables caught.
To reassemble the parts, use the original screws. If the types and the sizes of screws are not known, refer to the PARTS LIST.

(2) Drum

Note the following when handling or storing the drum.
When removing the drum unit, never expose the drum surface to strong direct light.
Keep the drum at an ambient temperature between -20°C/-4°F and 40°C/104°F and at a relative humidity not higher than 85% RH. Avoid abrupt changes in temperature and humidity.
Avoid exposure to any substance which is harmful to or may affect the quality of the drum.
Do not touch the drum surface with any object. Should it be touched by hands or stained with oil, clean it.

(3) Toner

Store the toner container in a cool, dark place.
Avoid direct light and high humidity.

(4) How to tell a genuine Kyocera toner container

As a means of brand protection, the Kyocera toner container utilizes an optical security technology to enable visual validation. A validation viewer is required to accomplish this.

Hold the validation viewer over the left side part of the brand protection seal on the toner container. Through each window of the validation viewer, the left side part of the seal should be seen as follows:

A black-colored band when seen through the left side window (●)

A shiny or gold-colored band when seen through the right side window (☼)

The above will reveal that the toner container is a genuine Kyocera branded toner container, otherwise, it is a counterfeit.

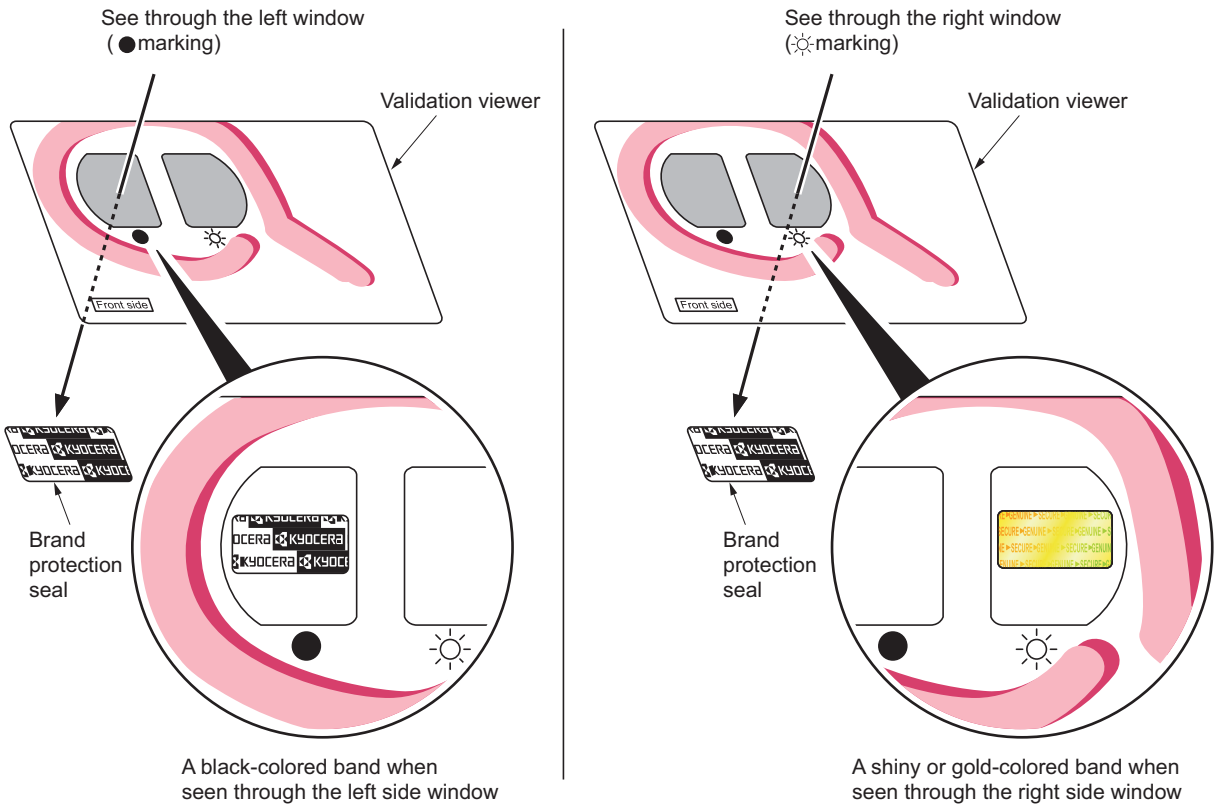

Figure 1-5-1

The brand protection seal has an incision as shown below to prohibit reuse.

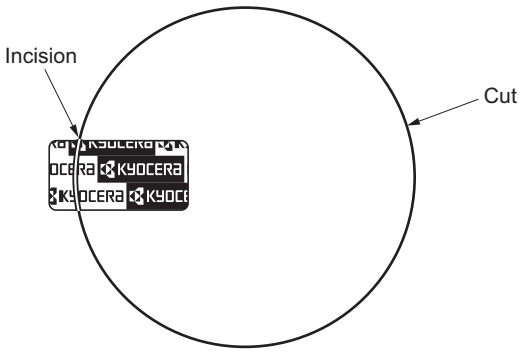

Figure 1-5-2

1-5-2 Outer covers

(1) Detaching and refitting the rear upper cover, right upper cover, left upper cover and front cover

Procedure

1. Open the paper conveying unit.
2. Release the hook and then remove the IF cover.

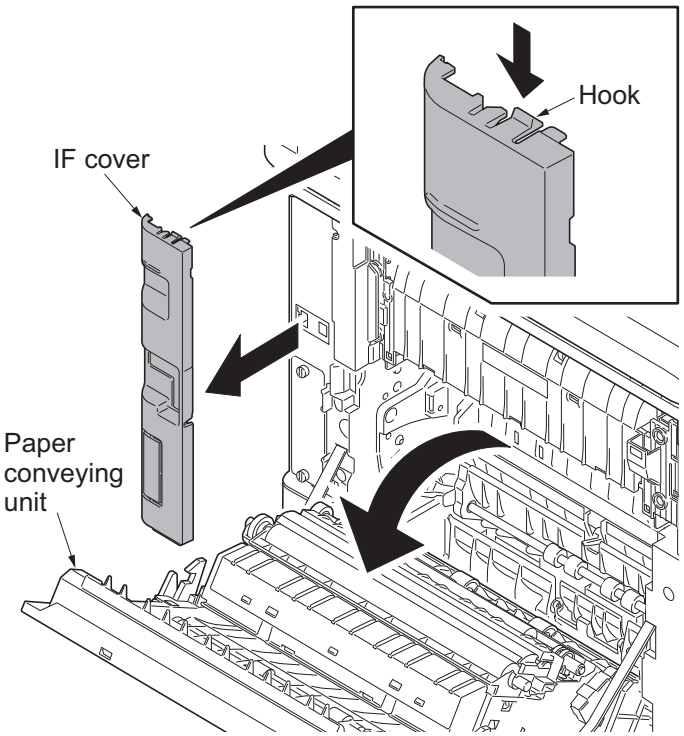

Figure 1-5-3

3. Remove two screws and then remove the rear upper cover.

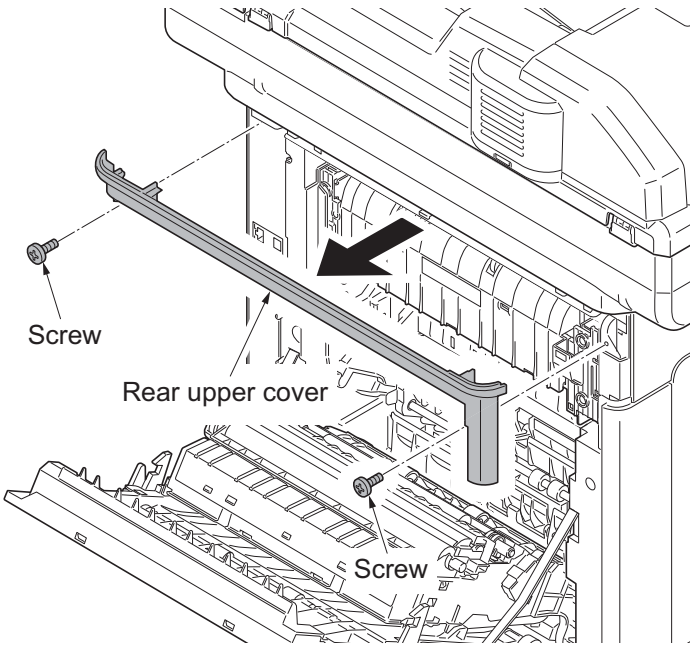

Figure 1-5-4

4. Pull the inner tray lever and open the inner tray.
5. Release two hooks. Slide the right upper cover backward and then remove it.

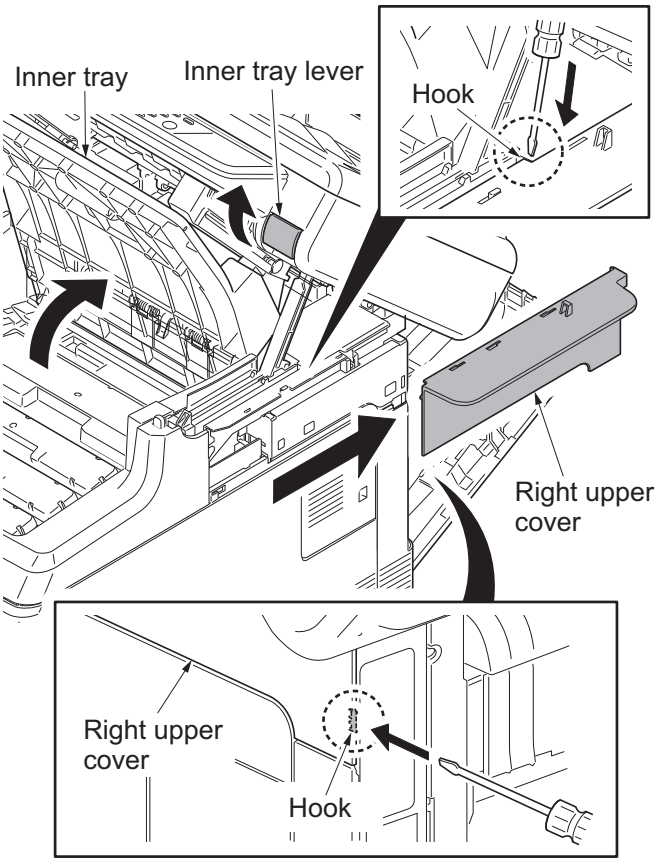

Figure 1-5-5

6. Release the hook. Slide the left upper cover backward and then remove it.

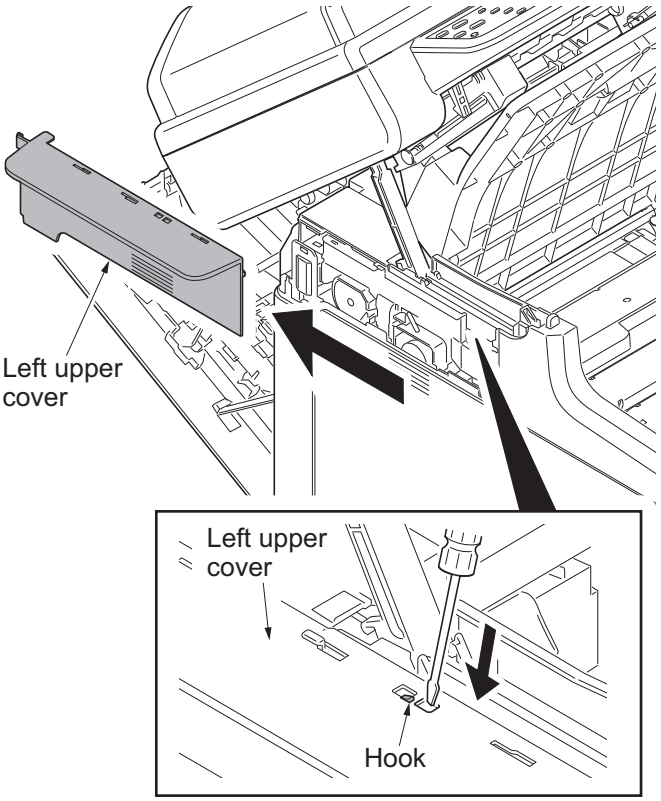

Figure 1-5-6

7. Release five hooks (hook A → B) and then remove the front cover.

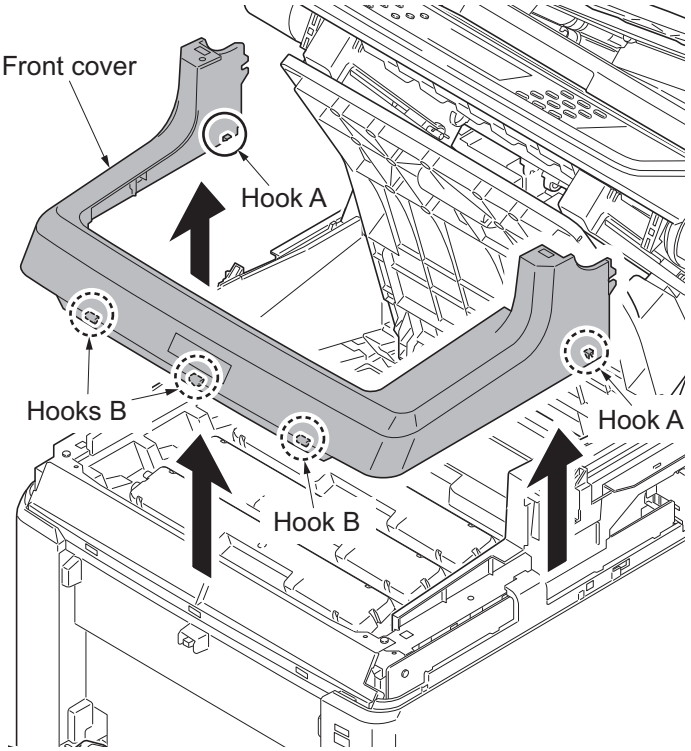

Figure 1-5-7

(2) Detaching and refitting the right rear cover, right cover and right lower cover

Procedure

1. Remove the rear upper cover, right upper cover, left upper cover and front cover (see page 1-5-3).
2. Slide the power source cover backward and then remove it.

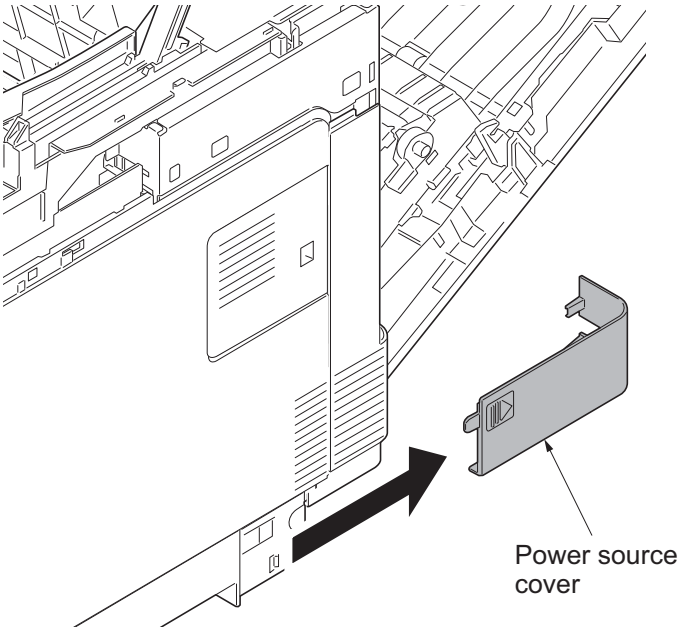

Figure 1-5-8

3. Remove the screw.
4. Release four hooks. Slide the right rear cover backward and then remove it.

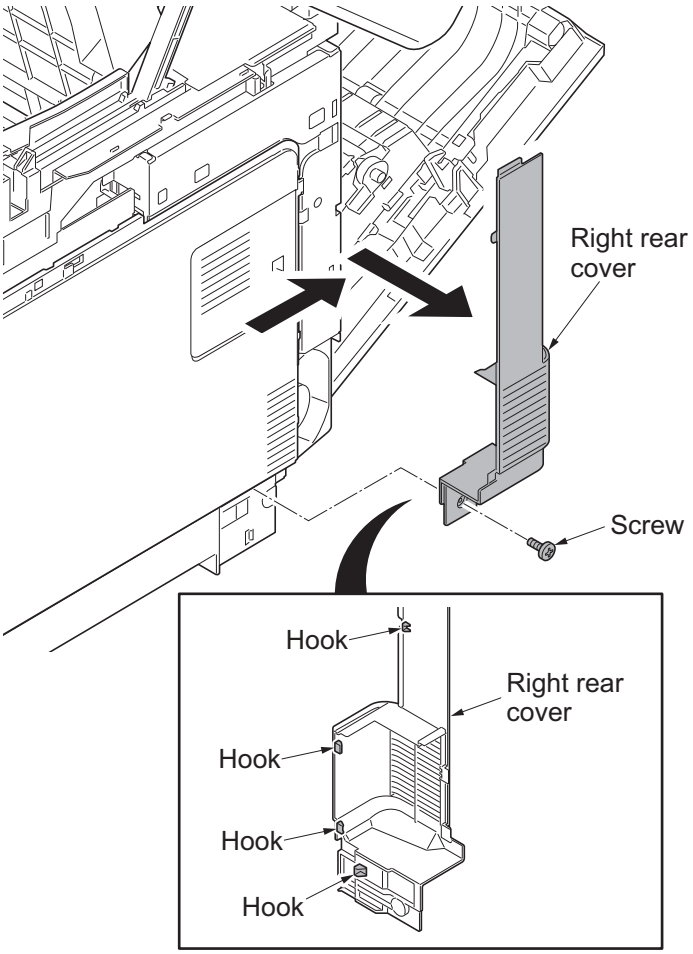

Figure 1-5-9

5. Open the memory cover and then remove it.

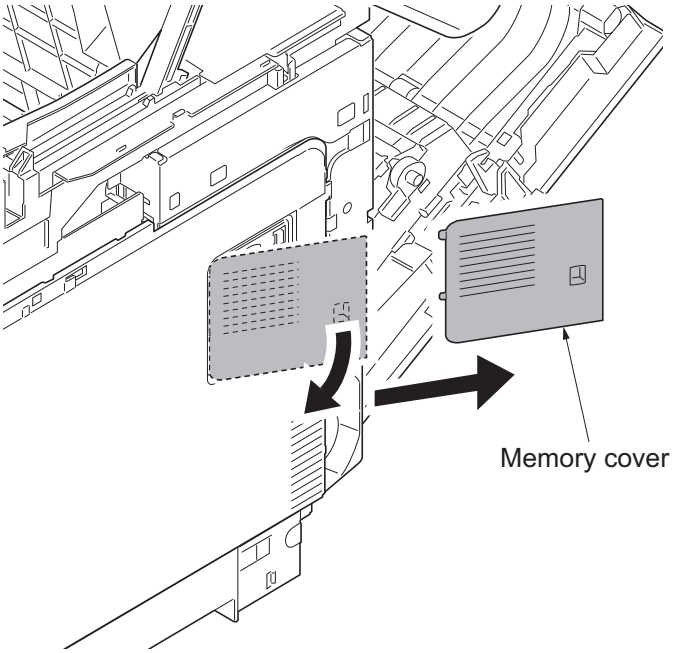

Figure 1-5-10

6. Open the waste toner cover.
7. Push the lock release button and then remove the waste toner box.

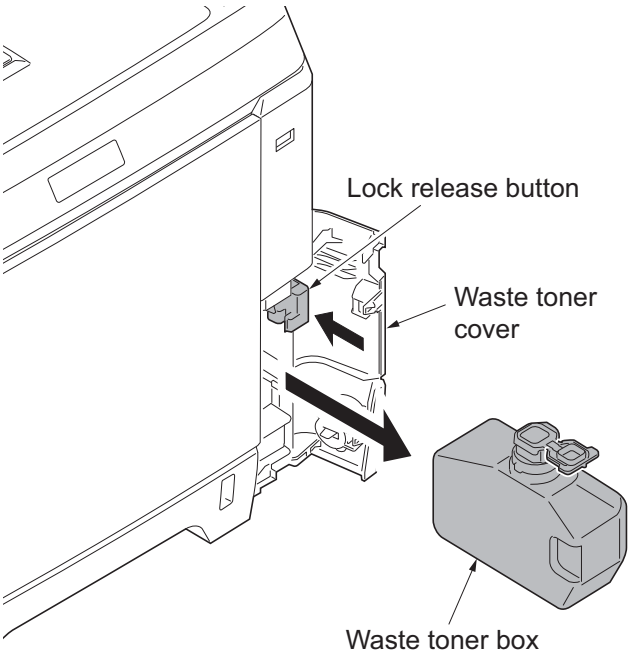

Figure 1-5-11

8. Release four hooks (hook A → B→ C). Slide the right cover forward and then remove it.
9. Remove the waste toner cover.

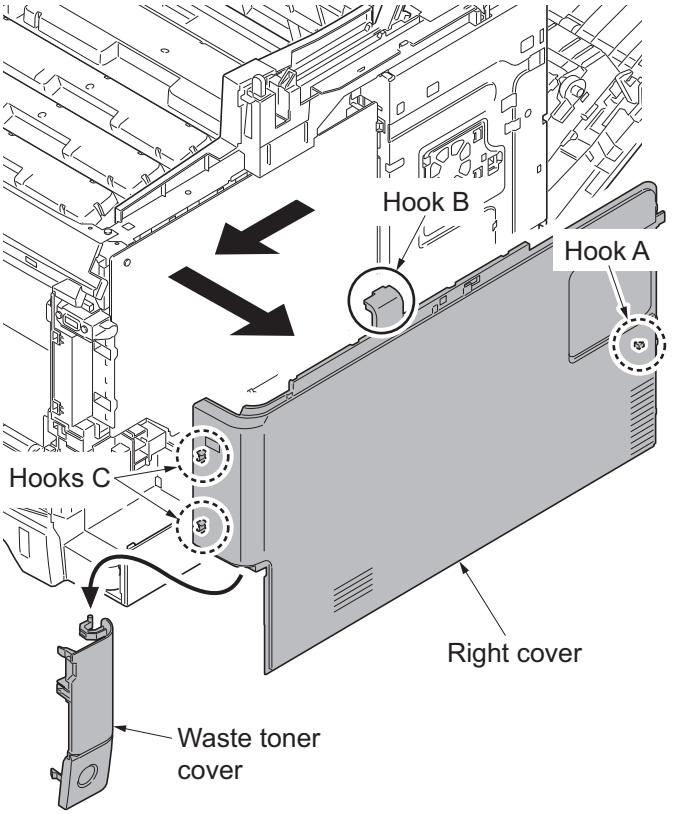

Figure 1-5-12

10. Release the hook. Slide the right lower cover forward and then remove it.

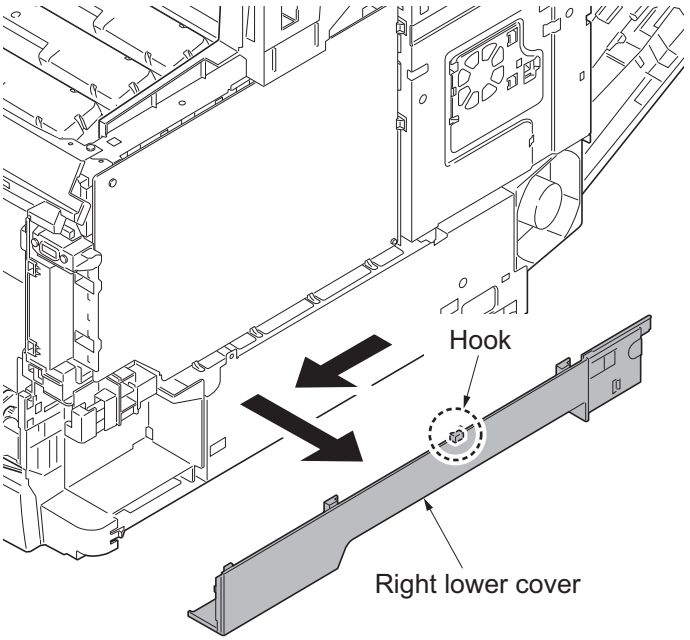

Figure 1-5-13

(3) Detaching and refitting the left rear cover, left cover and left lower cover

Procedure

1. Remove the rear upper cover, right upper cover, left upper cover and front cover (see page 1-5-3).
2. Release the hook. Slide the left rear cover upward and then remove it.

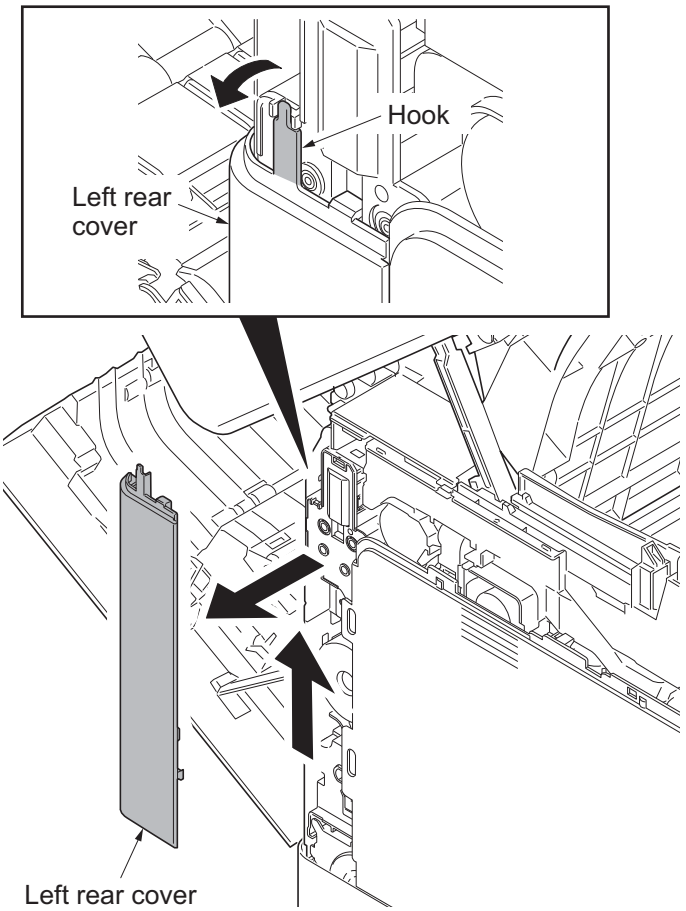

Figure 1-5-14

3. Release four hooks (hook A → B) and then remove the left cover.

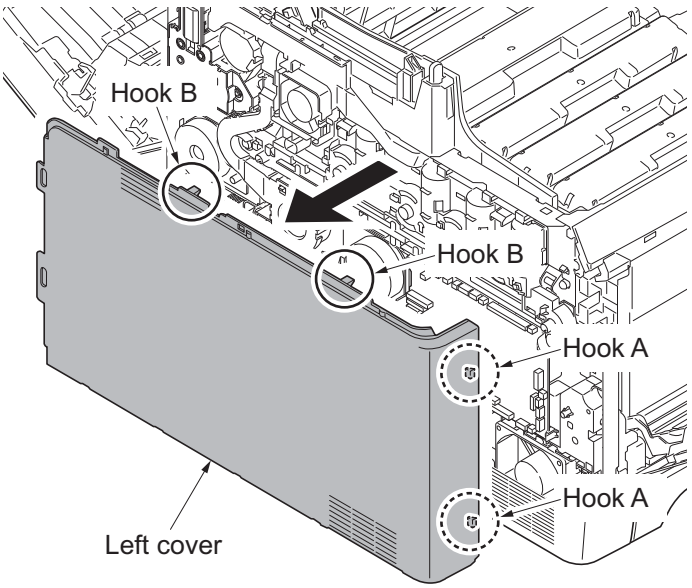

Figure 1-5-15

4. Remove the screw.
5. Release three hooks (hook A → B → C) and then remove the left lower cover.

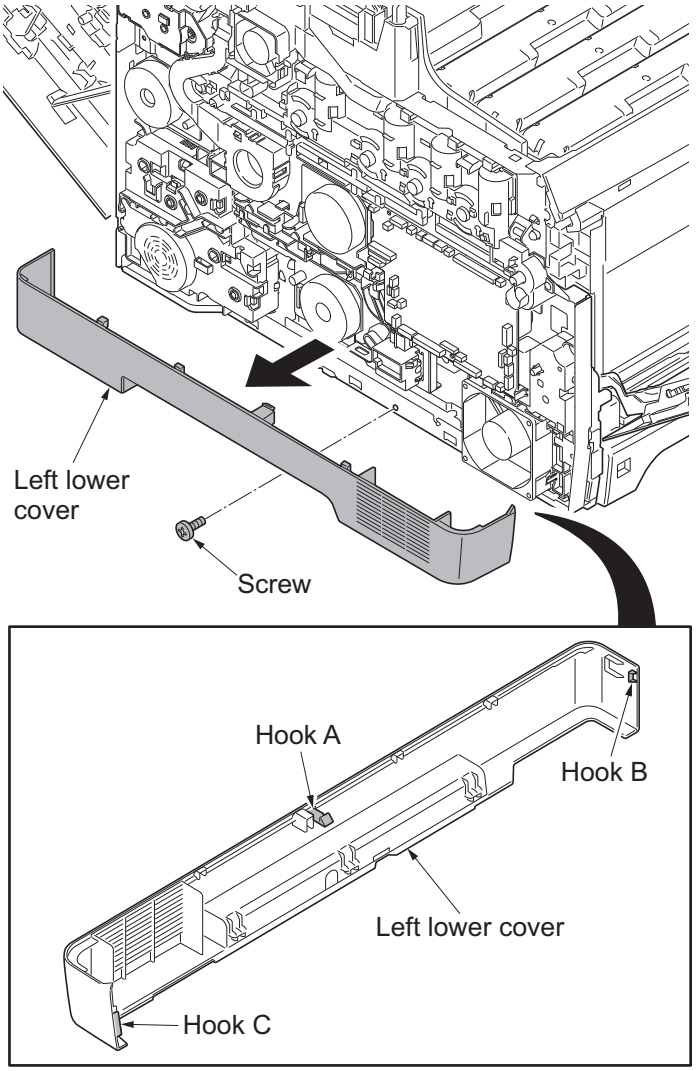

Figure 1-5-16

(4) Detaching and refitting the inner cover

Procedure

1. Remove the cassette.

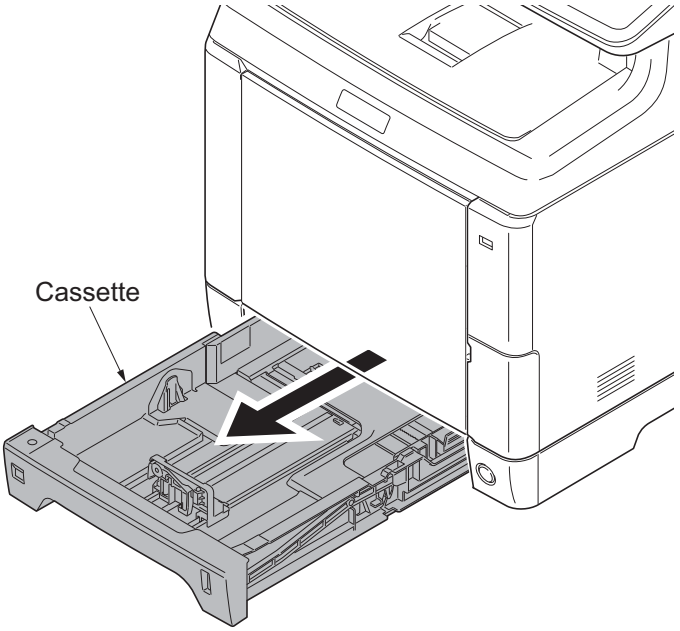

Figure 1-5-17

2. Remove the MP tray cover.
   (see page 1-5-17)
3. Remove the MP tray.

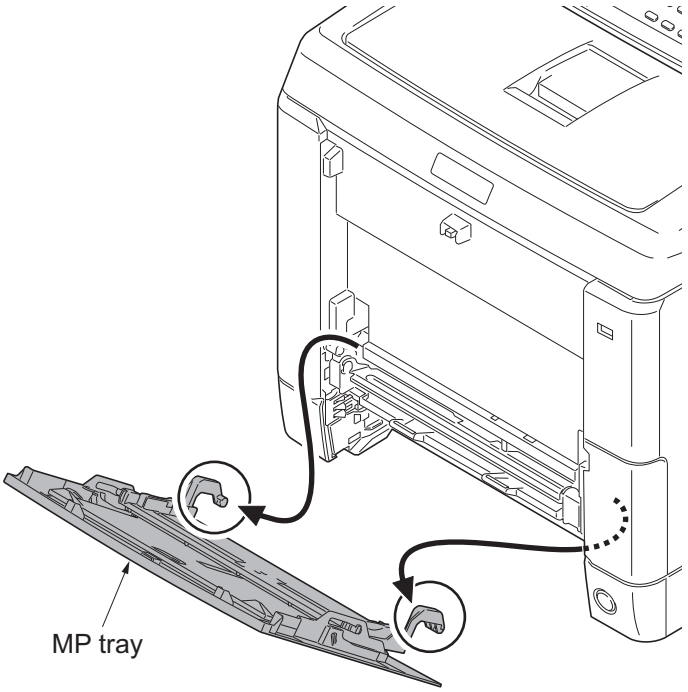

Figure 1-5-18

4. Remove the rear upper cover, right upper cover, left upper cover and front cover (see page 1-5-3).
5. Remove the right rear cover and right cover (see page 1-5-6).
6. Remove the left rear cover and left cover (see page 1-5-9).
7. Release three hooks and then remove the switch holder.
8. Release four hooks and then remove the inner cover.

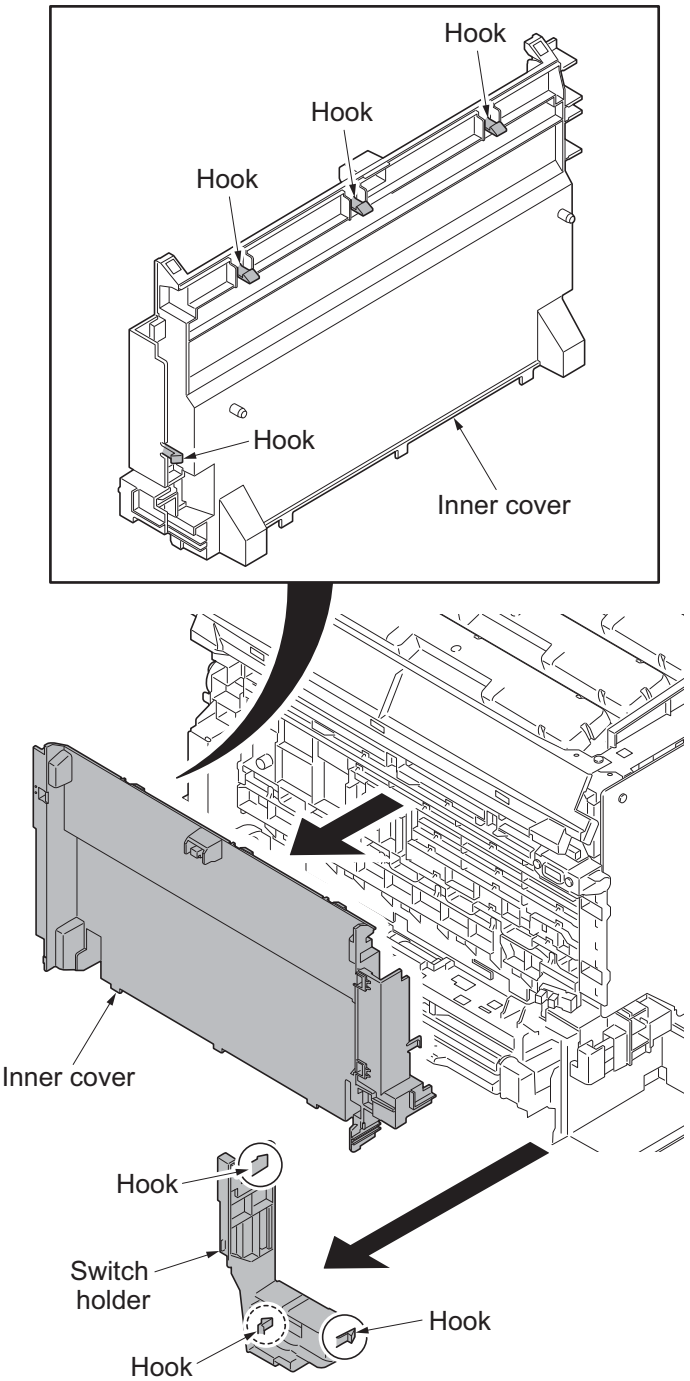

Figure 1-5-19

1-5-3 Paper feed section

(1) Detaching and refitting the retard roller unit

Procedure

1. Open the paper conveying unit.
2. Pull the middle roller unit forward to the hook.
3. While pressing the right and left hooks outwards, unlatch the shaft from the rail and remove the middle roller unit.

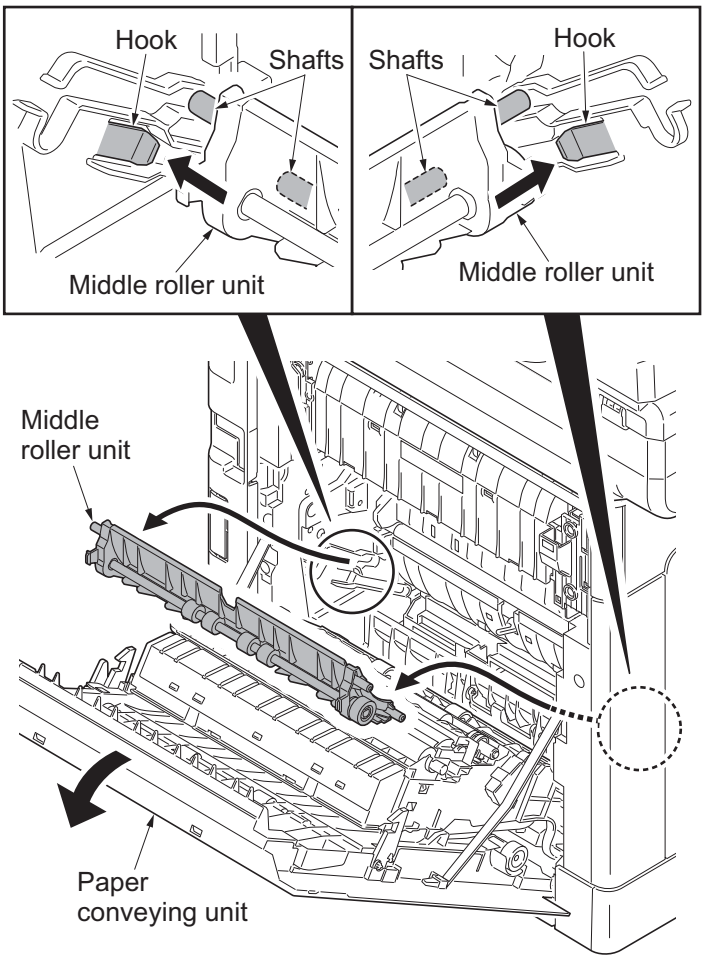

Figure 1-5-20

4. Pull the retard cover down and remove.
5. Release two hooks and then remove the retard roller unit.
6. Check or replace the retard roller unit and refit all the removed parts.

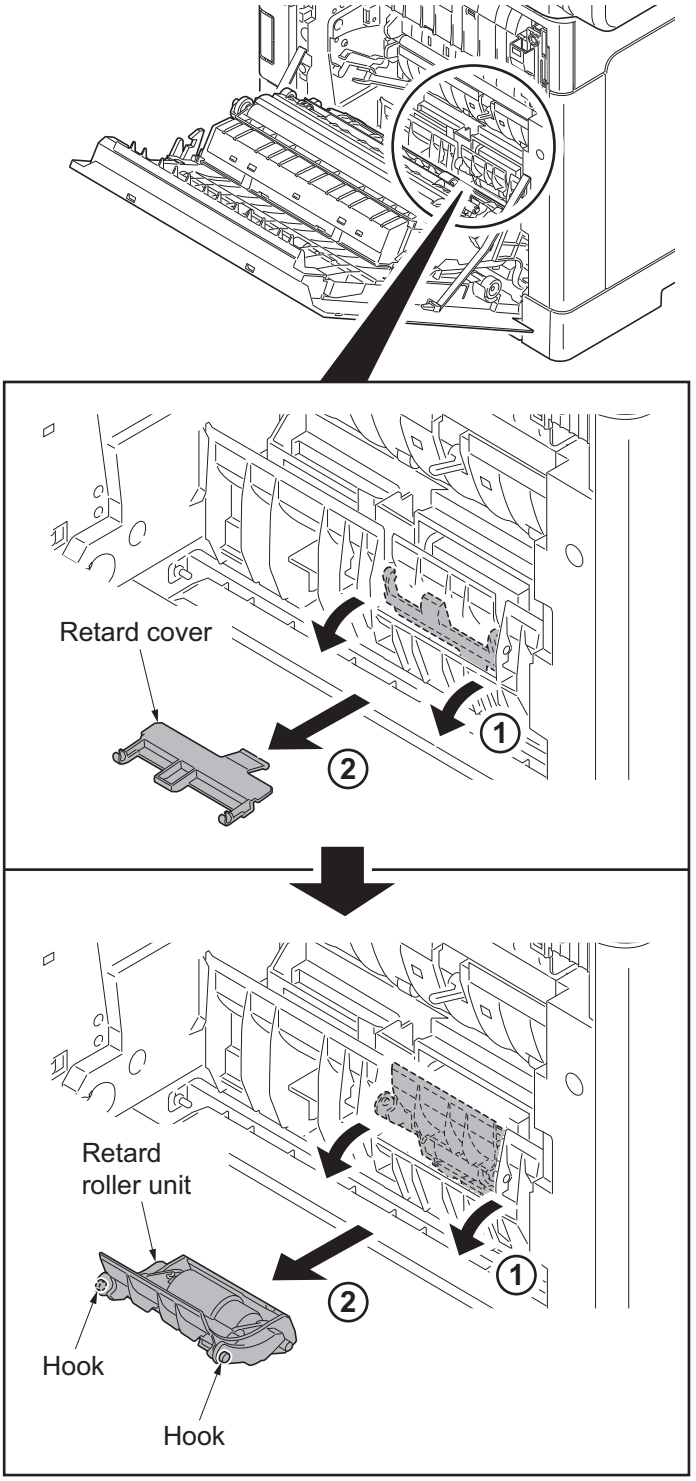

Figure 1-5-21

(2) Detaching and refitting the paper feed roller unit

Procedure

1. Remove the retard roller unit (see page 1-5-13).
2. Turn forward the lever of the feed pin to release the lock.
3. Slide the feed pin.

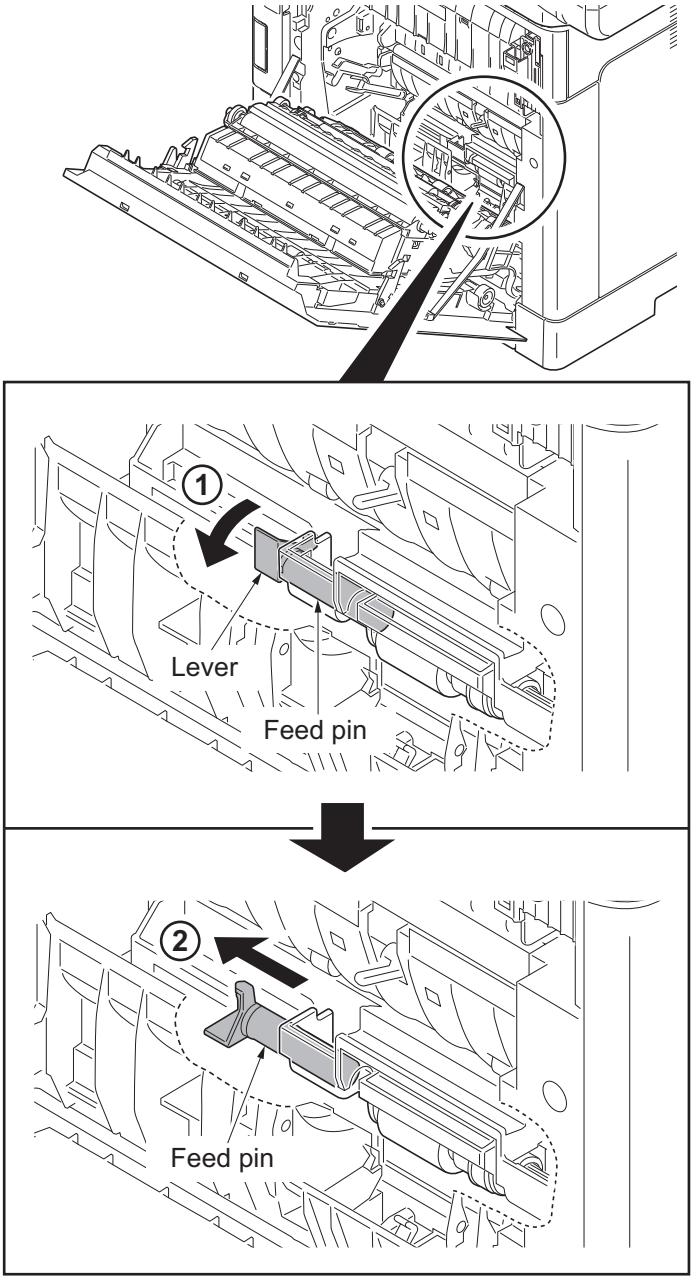

Figure 1-5-22

4. Remove the paper feed roller unit.
5. Check or replace the paper feed roller unit and refit all the removed parts.

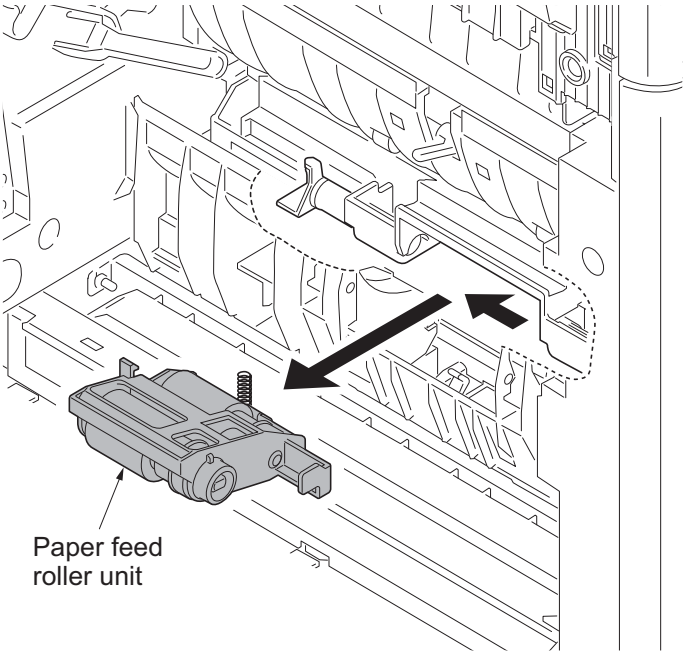

Figure 1-5-23

(3) Detaching and refitting the MP paper feed roller

Procedure

1. Remove the cassette.
2. Remove the guide sections of the MP tray cover from the MP tray.
3. Raise the MP tray cover upward. Release two hooks and then remove the MP tray cover.

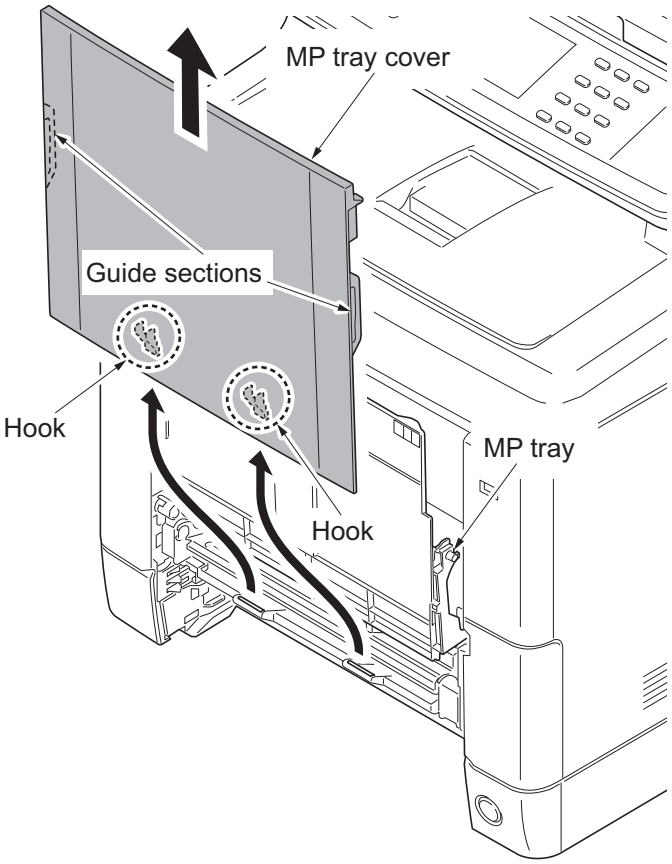

Figure 1-5-24

4. Open the conveying lower cover.

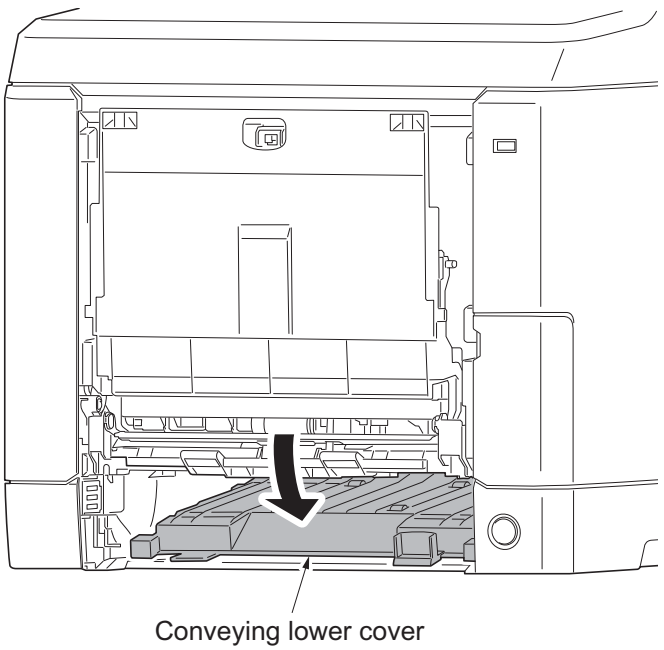

Figure 1-5-25

5. Remove two screws and then remove the MP paper feed lower unit.

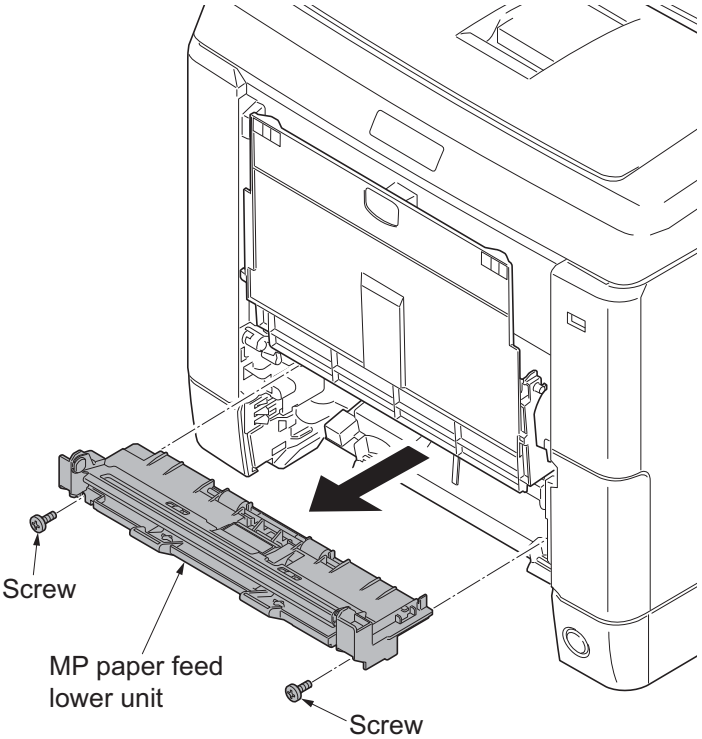

Figure 1-5-26

6. Pull the hook forward and then slide the MP feed shaft.
7. Remove the MP paper feed roller.
8. Check or replace the Mp paper feed roller and refit all the removed parts.

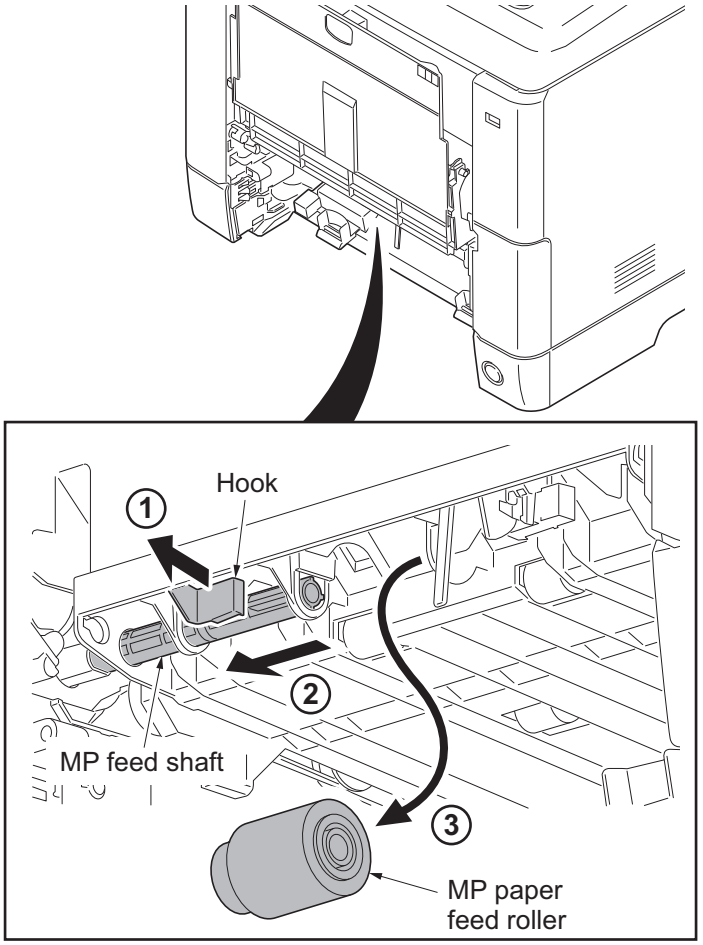

Figure 1-5-27

1-5-4 Developing section

(1) Detaching and refitting the developing unit

Procedure

1. Remove the intermediate transfer unit (see page 1-5-22).
2. Remove drum units (K, M, C, Y).
3. Pinch the lever of developing unit.
4. Remove developing units (K, M, C, Y).

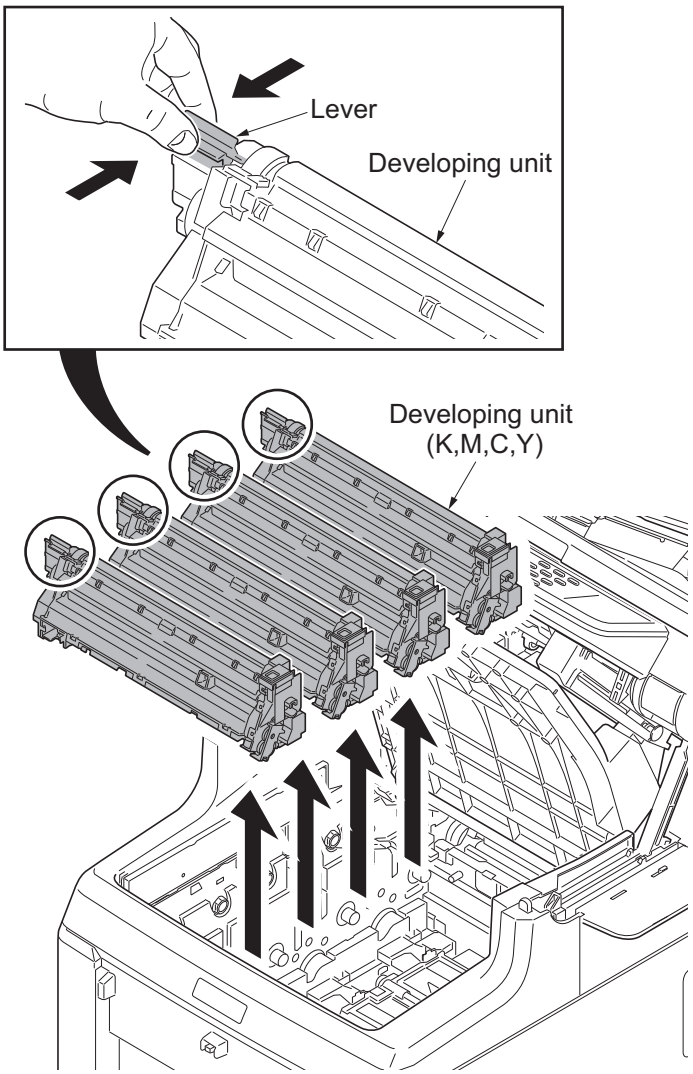

Figure 1-5-28

5. Check or replace the developing unit and refit all the removed parts.

NOTE:

*: Remove the cap before installing the new developing unit.

*: When reinstalling the developing unit, press it down until the lever of developing unit is engaged with the notch.

*: If it is difficult to engage the lever, press the unit down while rotating the gear to engage it.

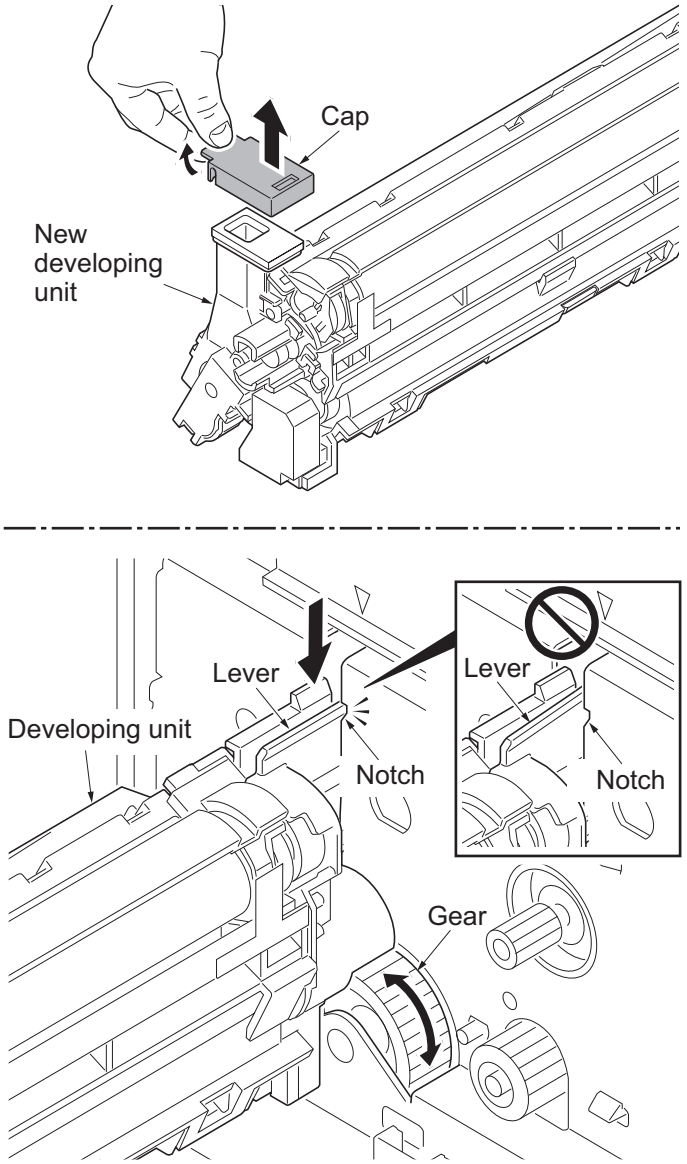

Figure 1-5-29

1-5-5 Drum section

(1) Detaching and refitting the drum unit

Procedure

1. Remove the intermediate transfer unit (see page 1-5-22).
2. Remove drum units (K, M, C, Y).
3. Check or replace the drum unit and refit all the removed parts.

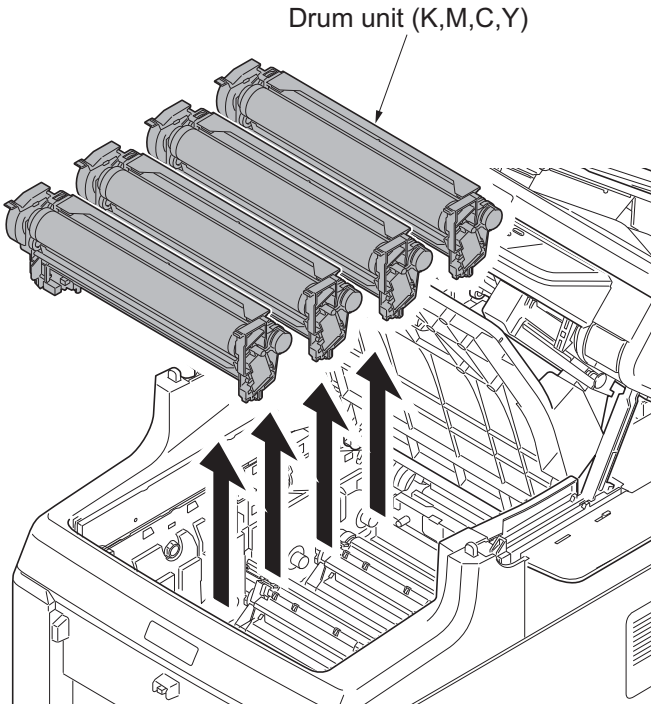

Figure 1-5-30

1-5-6 Transfer/Separation section

(1) Detaching and refitting the intermediate transfer unit

Procedure

1. Open the inner tray and the paper conveying unit.
2. Remove toner containers (K, M, C, Y).

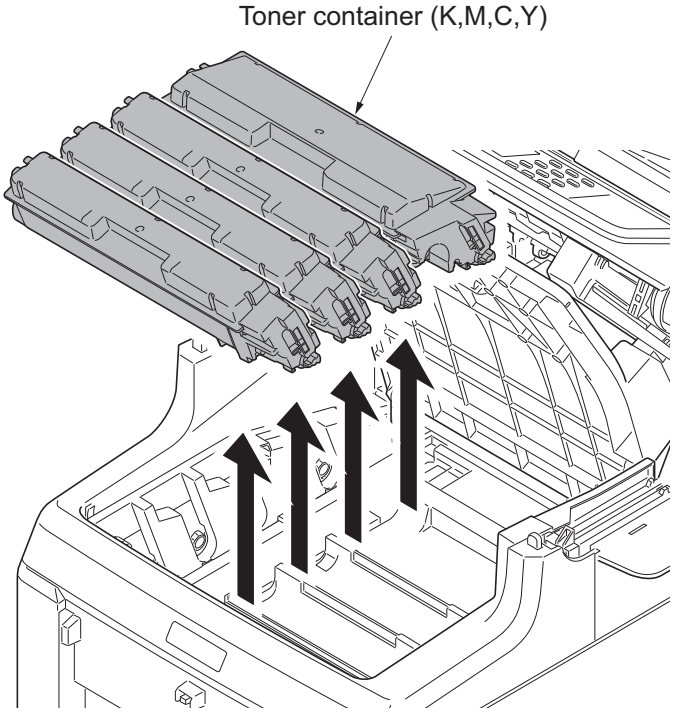

Figure 1-5-31

3. Slide the container guide forward and then remove it.

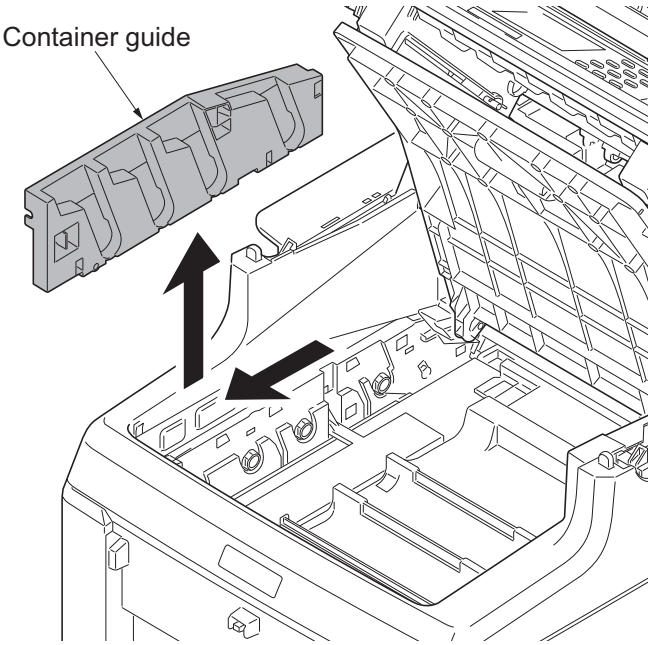

Figure 1-5-32

4. Open the RFID holder.

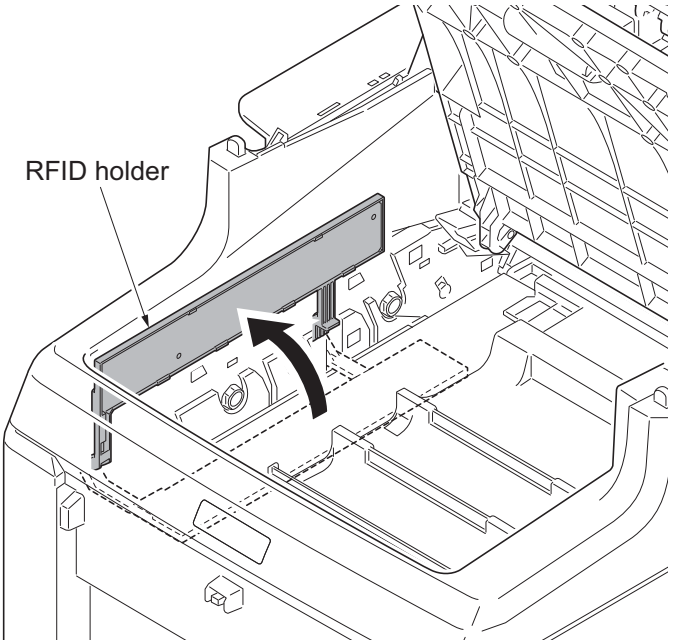

Figure 1-5-33

5. Slide the shutter forward and seal the toner inlet.
6. Remove the screw.

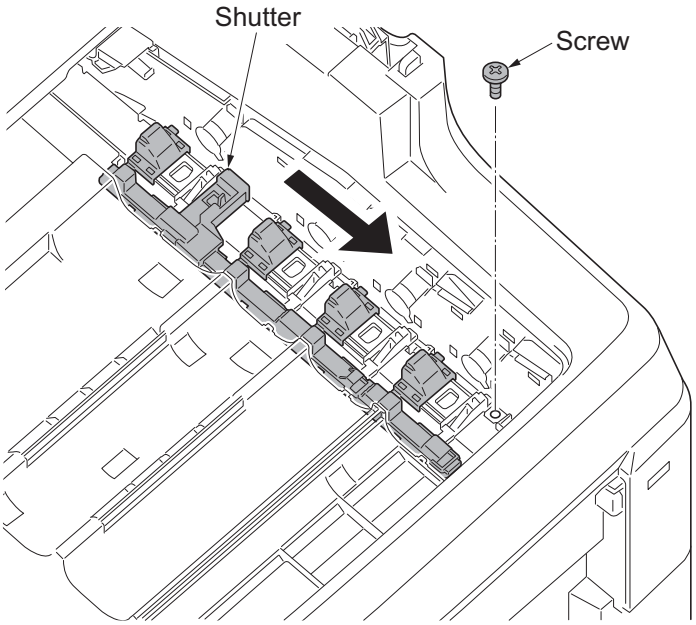

Figure 1-5-34

7. Remove the intermediate transfer unit.
8. Check or replace the intermediate transfer unit and refit all the removed parts.

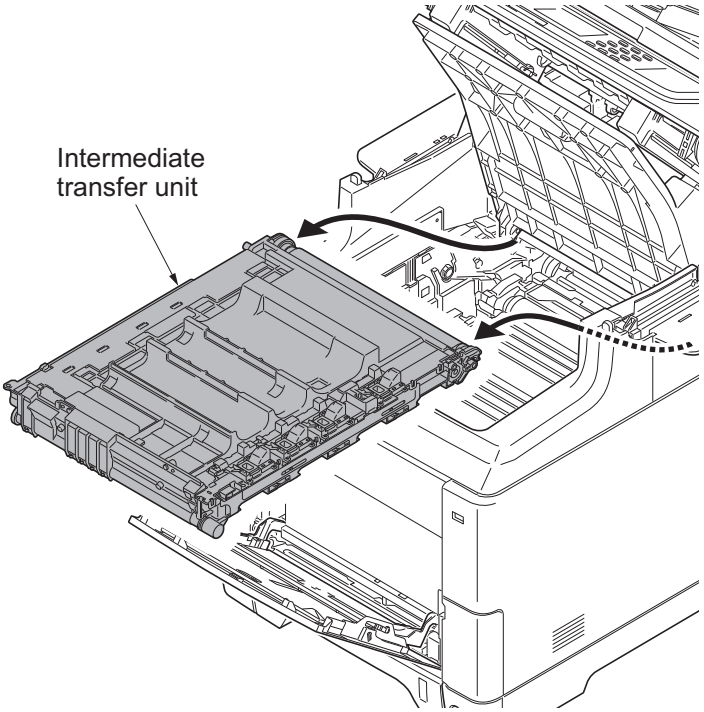

Figure 1-5-35

(2) Detaching and refitting the transfer roller unit

Procedure

1. Open the paper conveying unit.
2. Release two hooks and then remove the transfer roller unit.
3. Check or replace the transfer roller unit and refit all the removed parts.

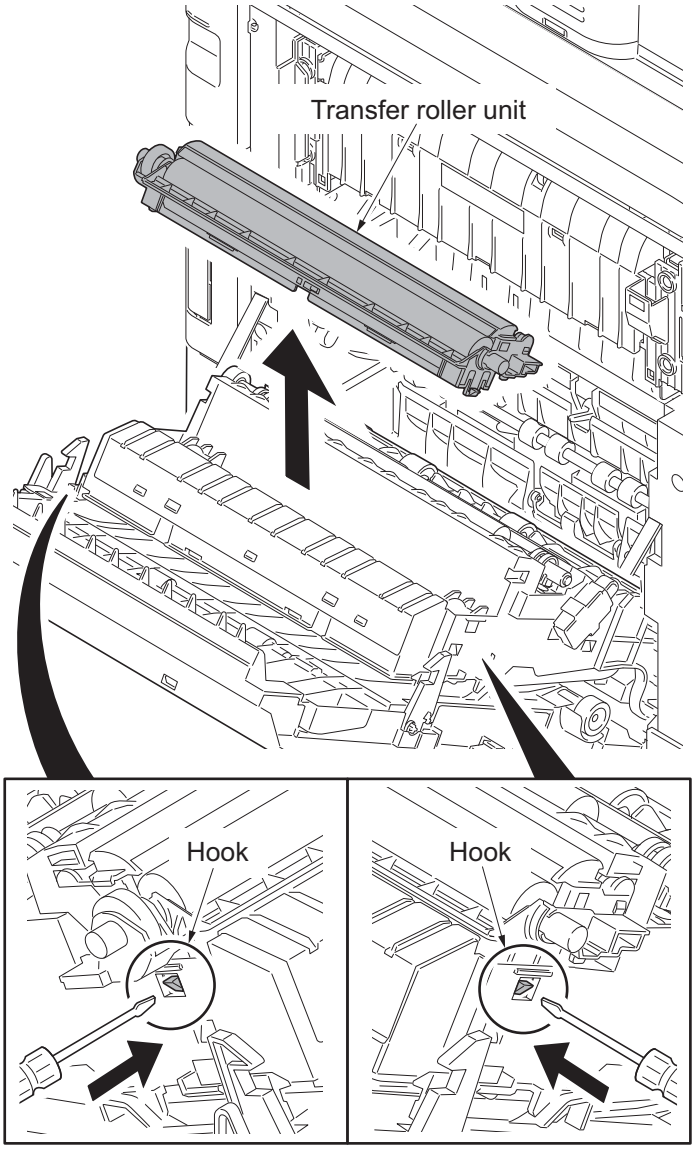

Figure 1-5-36

1-5-7 Fuser section

(1) Detaching and refitting the fuser unit

Procedure

1. Open the paper conveying unit.
2. Remove the IF cover (see page 1-5-3).
3. Remove the screw and then fuser wire cover.

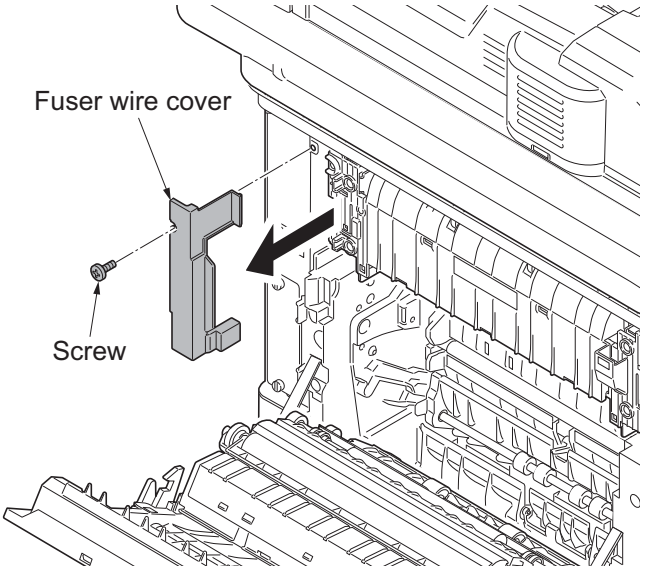

Figure 1-5-37

4. Remove three connectors.
5. Remove two screws and then remove the fuser unit.
6. Check or replace the fuser unit and refit all the removed parts.

*: Take care not to get the cables caught.

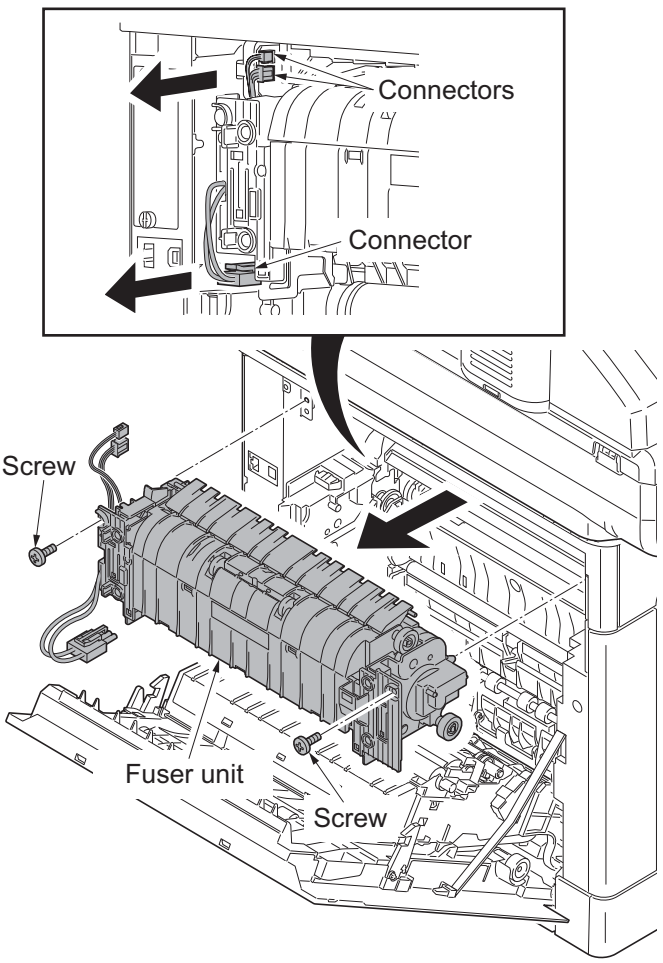

Figure 1-5-38

1-5-8 PWBs

(1) Detaching and refitting the engine PWB

Procedure

1. Remove the left cover (see page 1-5-9).
2. Remove all connectors from the engine PWB.

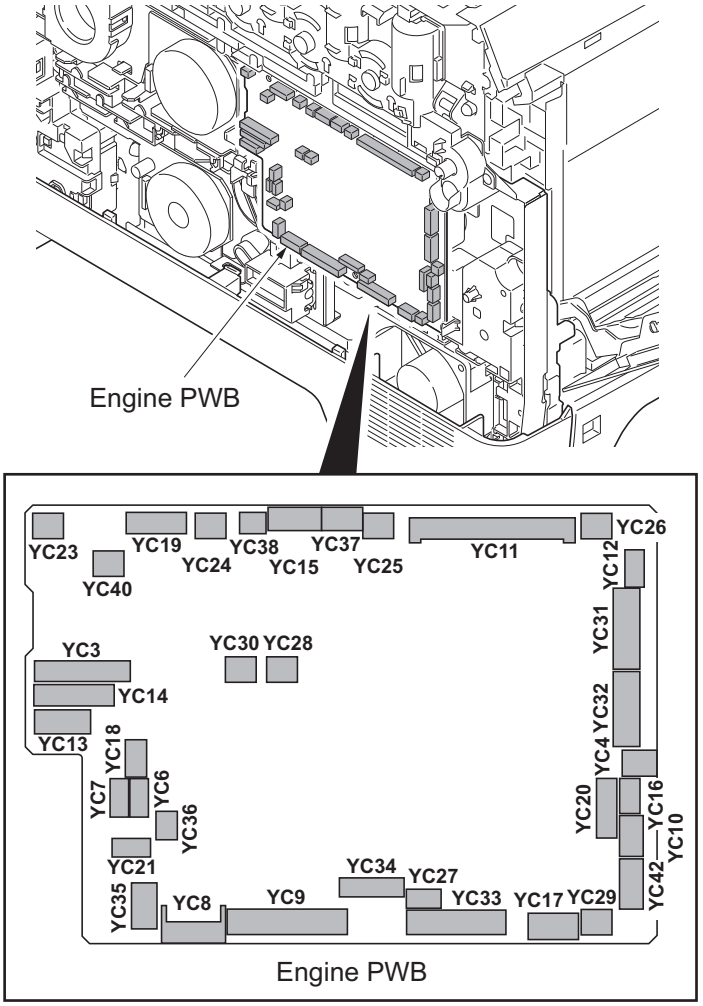

Figure 1-5-39

3. Remove three screws and then remove the engine PWB.
4. Check or replace the engine PWB and refit all the removed parts.

*: To replace the engine PWB, remove the EEPROM (U1) from the old engine PWB and mount it to the new engine PWB.

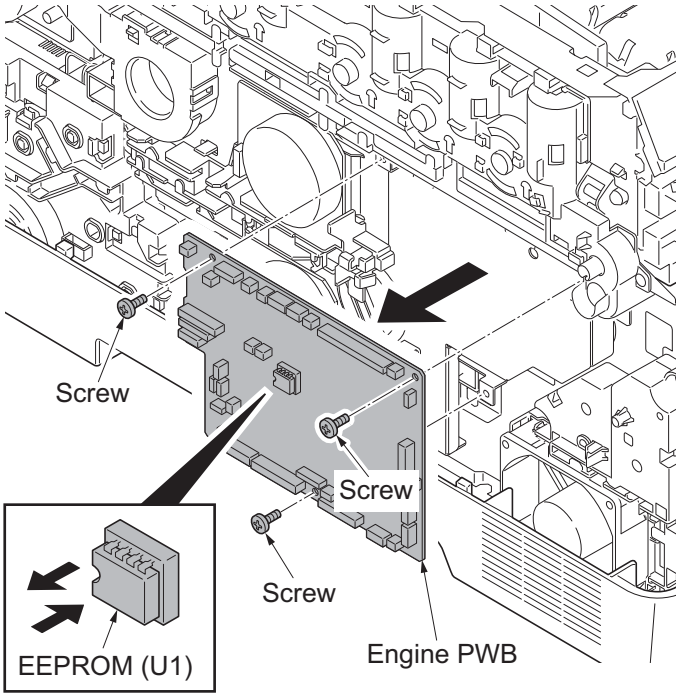

Figure 1-5-40

(2) Detaching and refitting the power source PWB

Procedure

1. Remove the right rear cover, right cover and right lower cover (see page 1-5-6).
2. Remove four screws and then remove the power source shield.
   Screws A and B are unidentical, therefore, do not mix up.

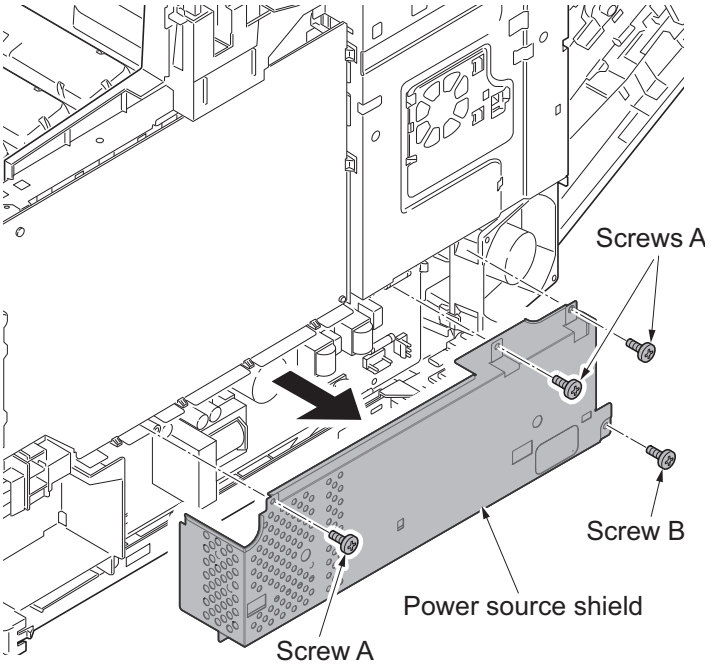

Figure 1-5-41

3. Remove all connectors from power source PWB.
4. Remove two screws.
5. Release three hooks and then remove the power source PWB.
6. Check or replace the power source PWB and refit all the removed parts.

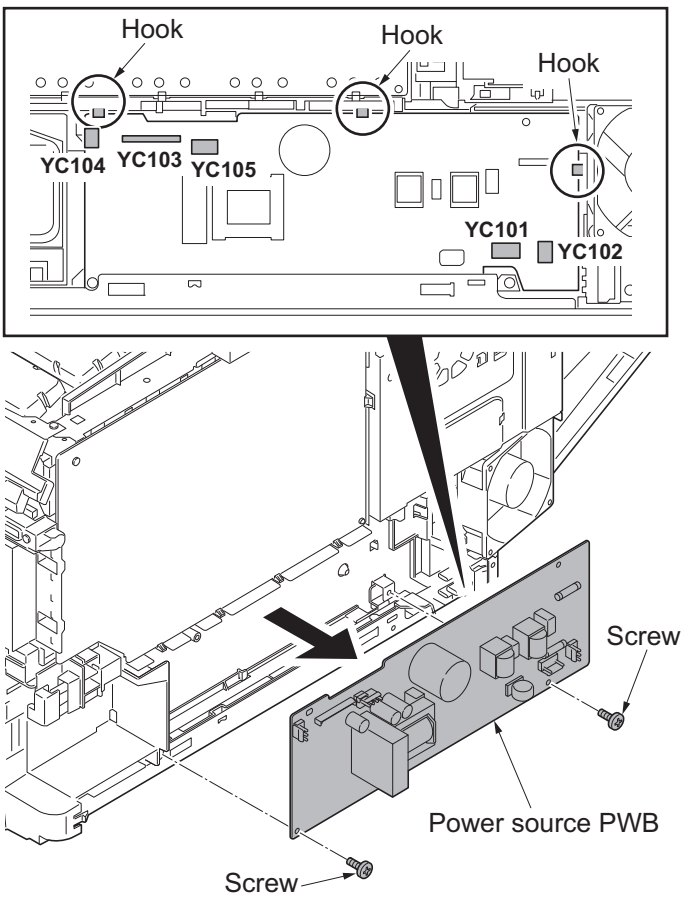

Figure 1-5-42

(3) Detaching and refitting the main PWB

Procedure

1. Remove the FAX control PWB, if installed (see page 1-5-36).
2. Remove the right rear cover, right cover and right lower cover (see page 1-5-6).
3. Remove three screws and then remove the power source shield.
   Screws A and B are unidentical, therefore, do not mix up.

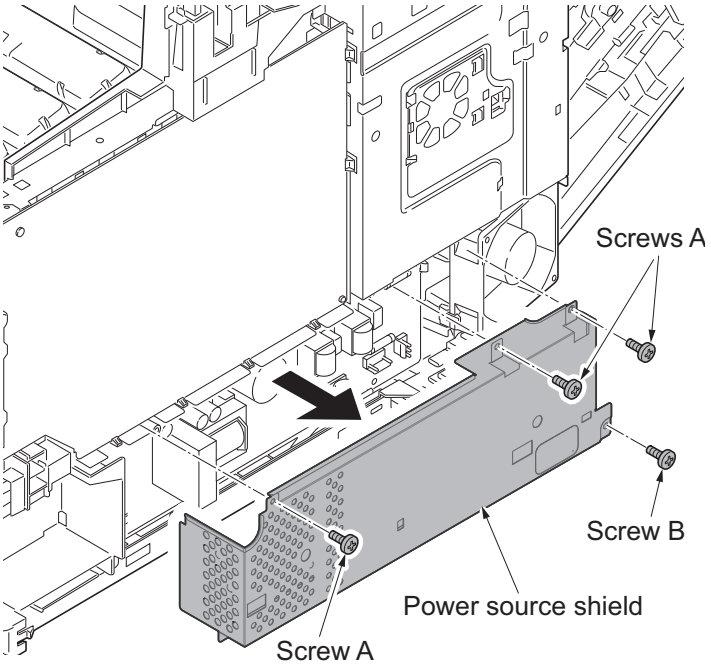

Figure 1-5-43

4. Open the fan bracket.
5. Slide the fan plate. Release four hooks and then remove the fan plate.

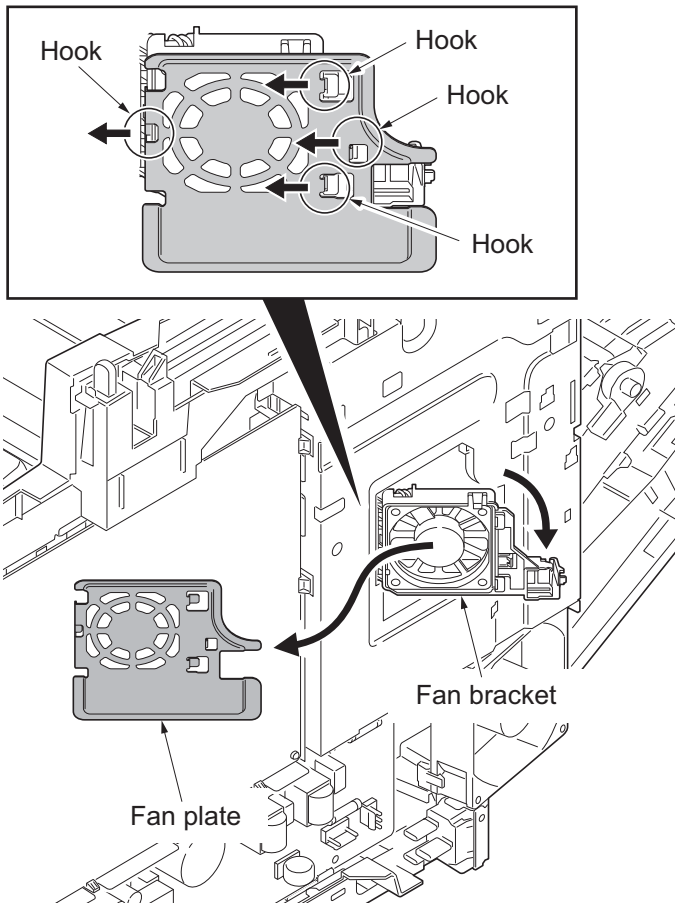

Figure 1-5-44

6. Remove the screw and then remove the fuser wire cover.

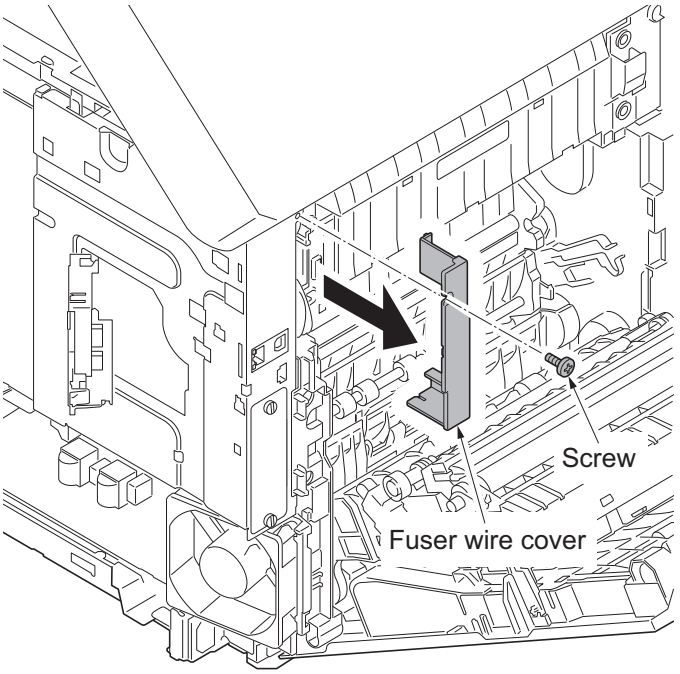

Figure 1-5-45

7. Remove five screws and then remove the controller shield.

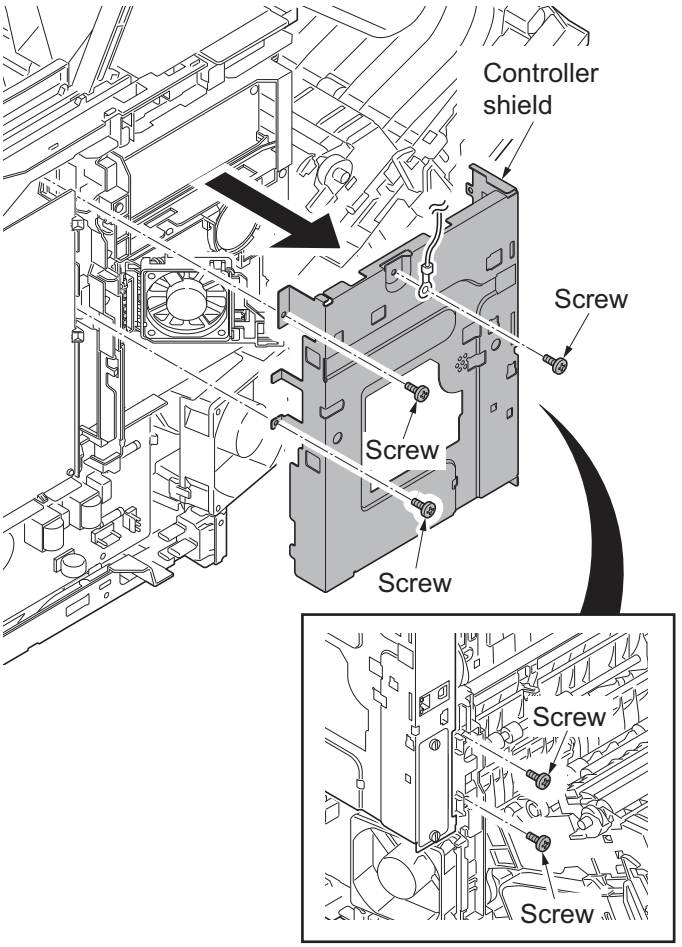

Figure 1-5-46

8. Remove the connector (YC41) of the controller fan motor.
9. Open the fan bracket and then remove it.

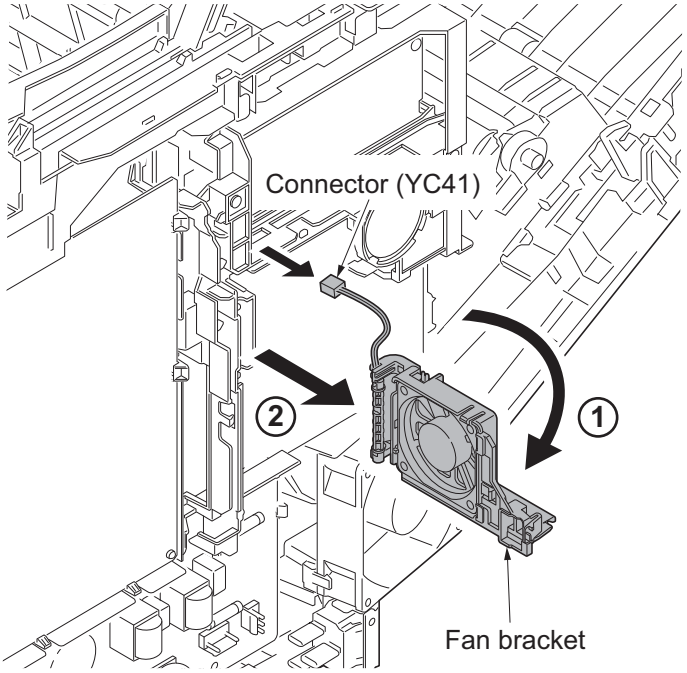

Figure 1-5-47

10. Remove seven connectors (YC15, YC37, YC41, YC40, YC38, YC39 and YC42) from the main PWB.

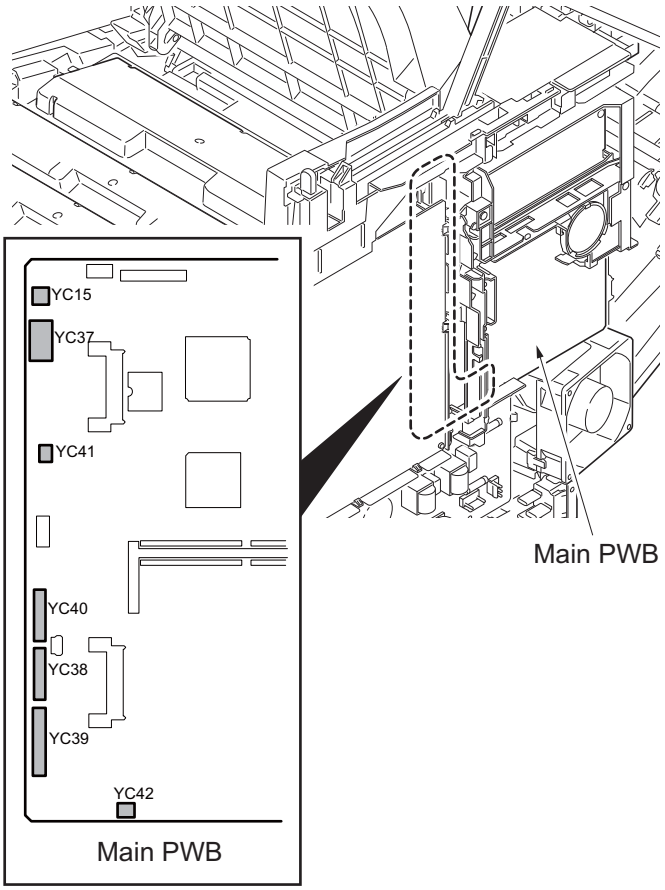

Figure 1-5-48

11. Remove two screws.
12. Release three hooks and then remove the wire holder.

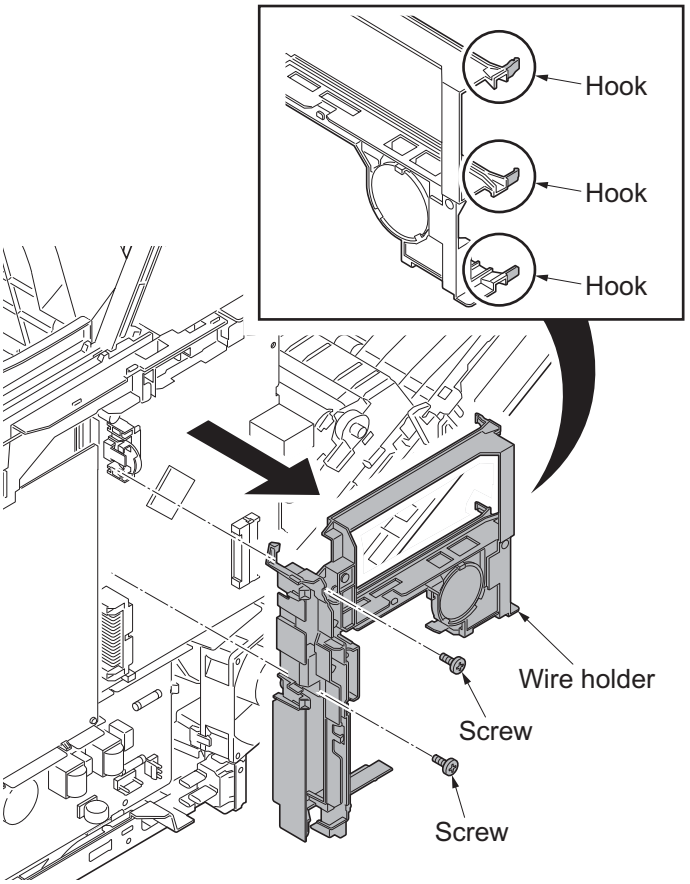

Figure 1-5-49

13. Remove six connectors (YC36, YC32, YC12) and two FFCs (YC8, YC43) from the main PWB.

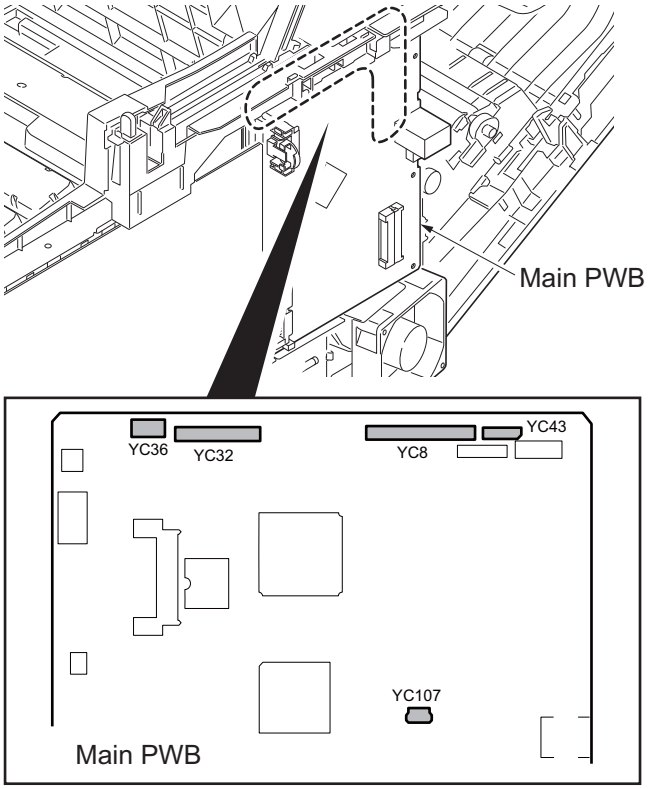

Figure 1-5-50

14. Remove three screws and then remove the main PWB.
15. Check or replace the main PWB and refit all the removed parts.

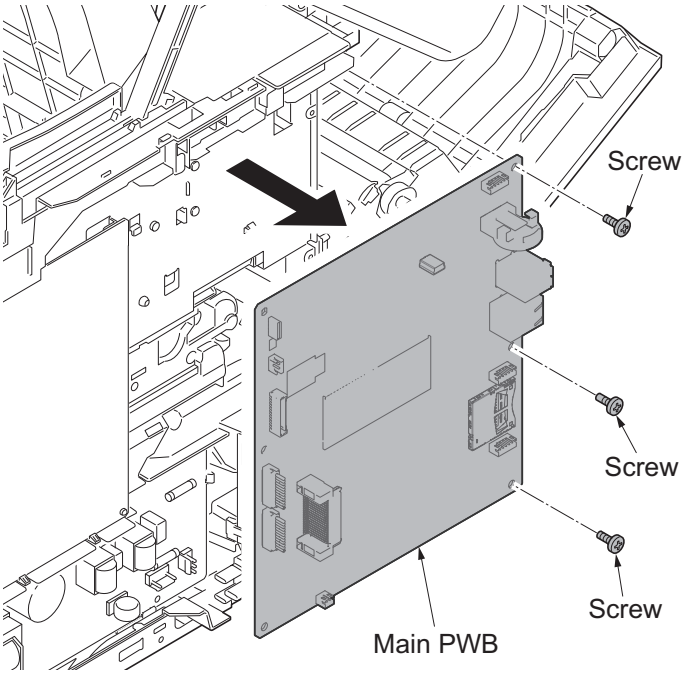

Figure 1-5-51

(4) Detaching and refitting the high voltage PWB

Procedure

1. Remove the right rear cover and right cover (see page 1-5-6).
2. Remove the FFC from the high voltage PWB.

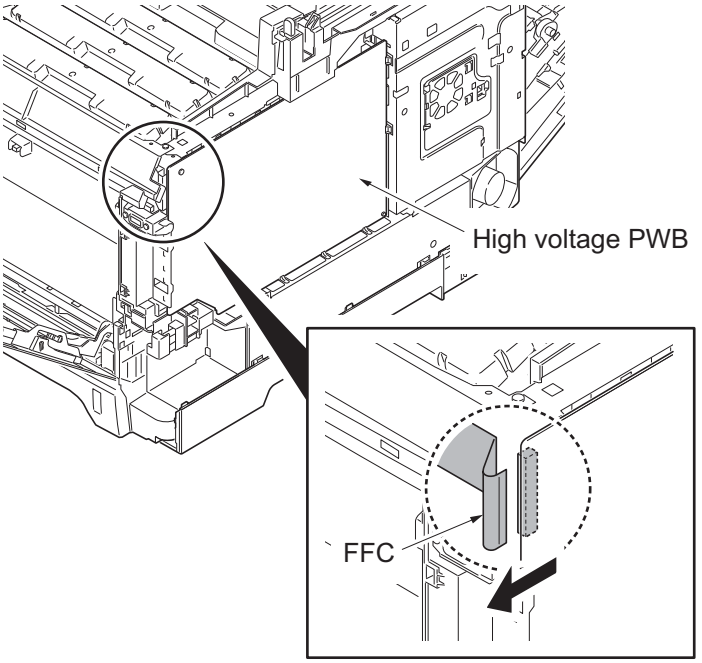

Figure 1-5-52

3. Remove the screw.
4. Release eight hooks and then remove the high voltage PWB.
5. Check or replace the high voltage PWB and refit all the removed parts.

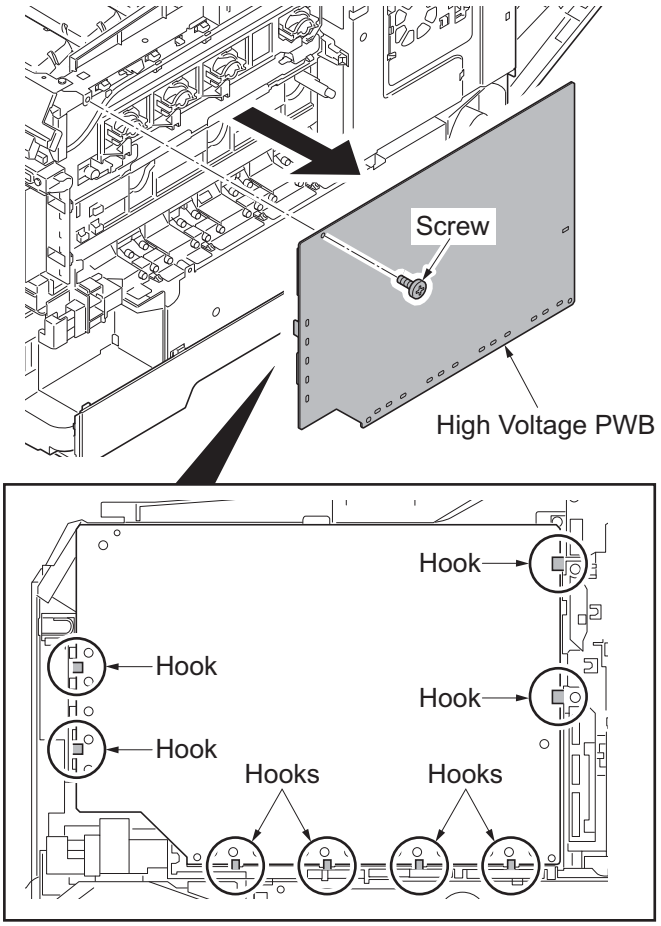

Figure 1-5-53

(5) Detaching and refitting the FAX control PWB (4 in 1 model (with FAX) only)

Procedure

1. Remove the IF cover (see page 1-5-3).
2. Remove two screws and then remove the FAX control PWB.
3. Check or replace the FAX control PWB and refit all the removed parts.

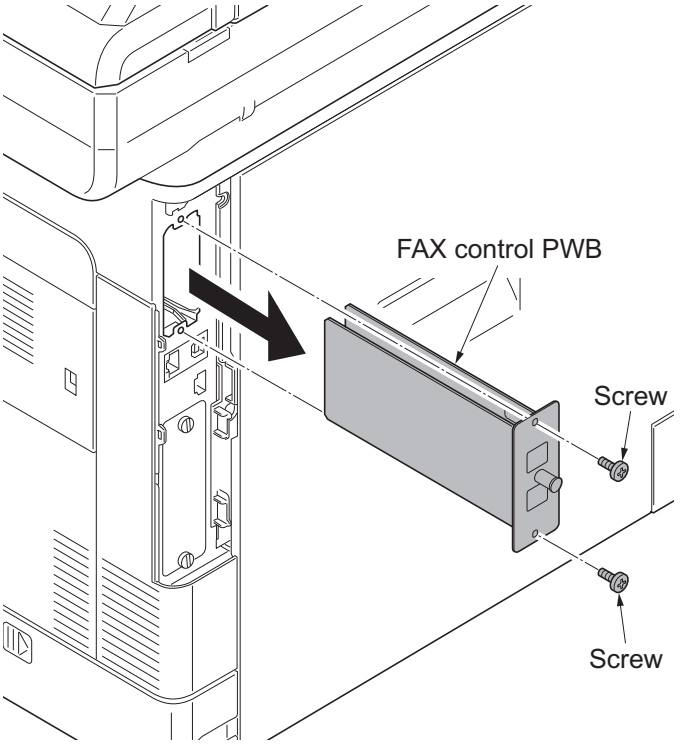

Figure 1-5-54

1-5-9 Drive section

(1) Detaching and refitting the MP feed drive unit

Procedure

1. Remove the rear upper cover, right upper cover, left upper cover and front cover (see page 1-5-3).
2. Remove the right rear cover and right cover (see page 1-5-6).
3. Remove the left rear cover, left cover and left lower cover (see page 1-5-9).
4. Remove the inner cover (see page 1-5-11).
5. Remove the engine PWB (see page 1-5-27).
6. Release three hooks and then remove the left fan motor.

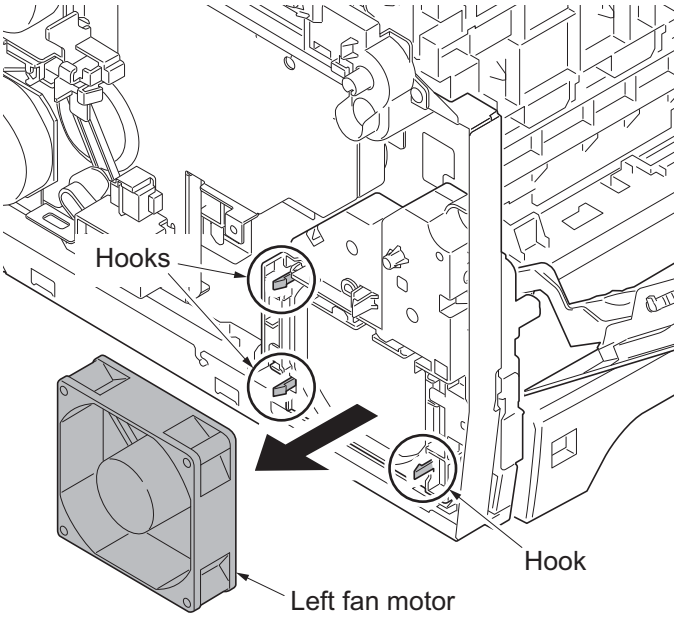

Figure 1-5-55

7. Turn the cam inside the device to the position indicated.
8. Remove three screws and then remove MP feed drive unit.
9. Check or replace the MP feed drive unit and refit all the removed parts.

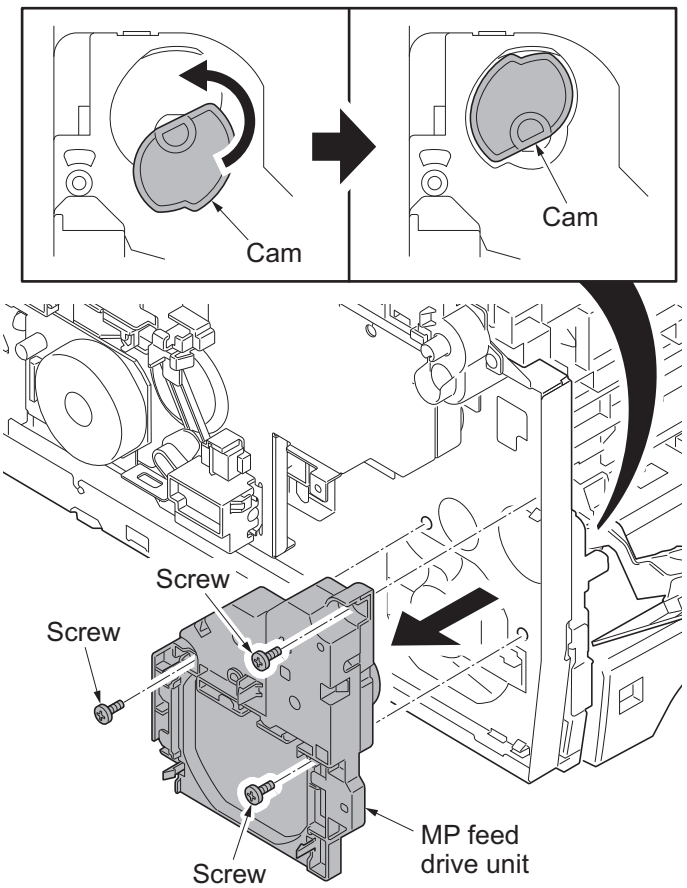

Figure 1-5-56

(2) Detaching and refitting the drum/developing drive unit

Procedure

1. Remove drum units (K, M, C, Y) and developing units (K, M, C, Y) (see page 1-5-21, 19).
2. Remove the rear upper cover, right upper cover, left upper cover and front cover (see page 1-5-3).
3. Remove the left rear cover, left cover and left lower cover (see page 1-5-9).
4. Remove the engine PWB (see page 1-5-27).
5. Remove the screw and release the hook, and then remove the container fan unit.

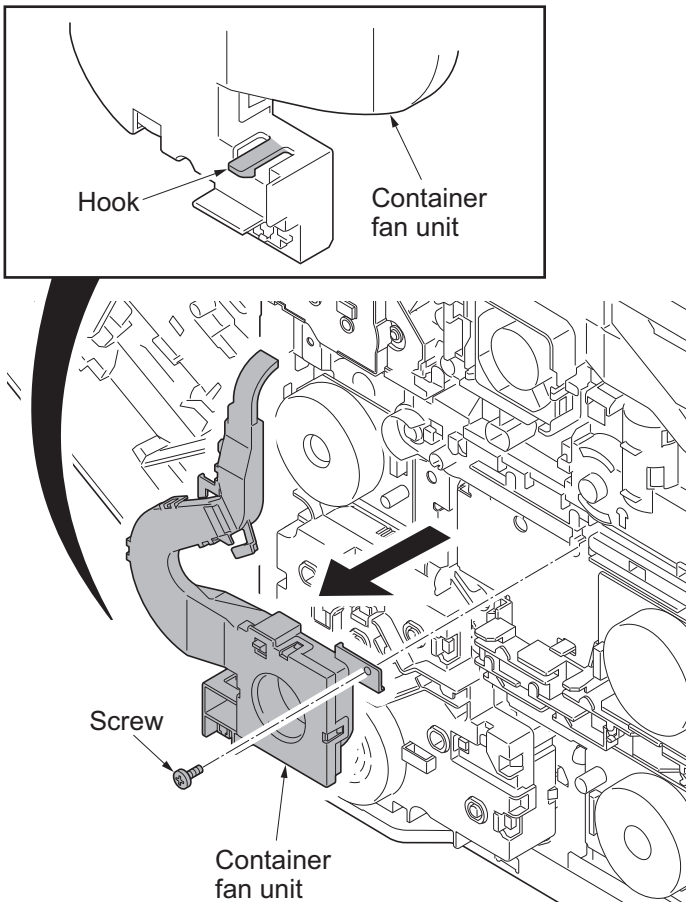

Figure 1-5-57

6. Remove the screw and then remove the ID guide.

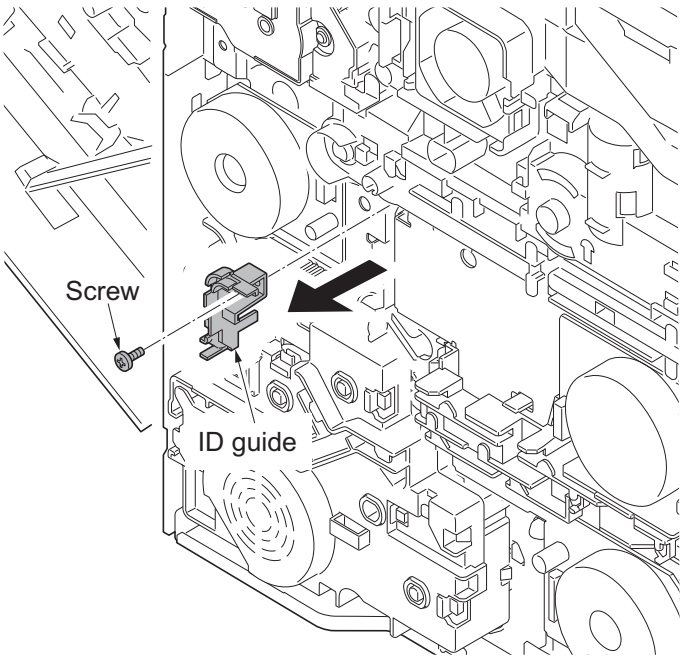

Figure 1-5-58

7. Remove five screws and then remove drum/developing drive unit.
8. Check or replace the drum/developing drive unit and refit all the removed parts.

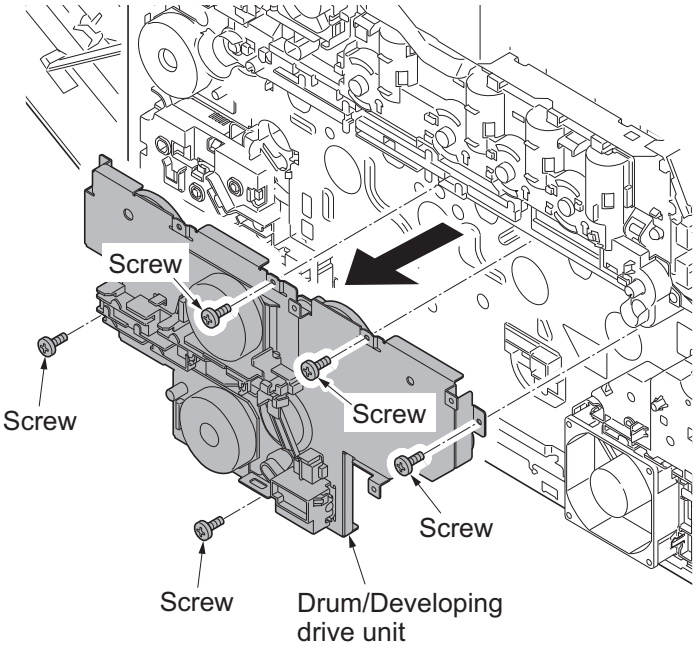

Figure 1-5-59

(3) Detaching and refitting the paper feed drive unit

Procedure

1. Remove the rear upper cover, right upper cover, left upper cover and front cover (see page 1-5-3).
2. Remove the left rear cover, left cover and left lower cover (see page 1-5-9).
3. Remove connector (YC3) from engine PWB.

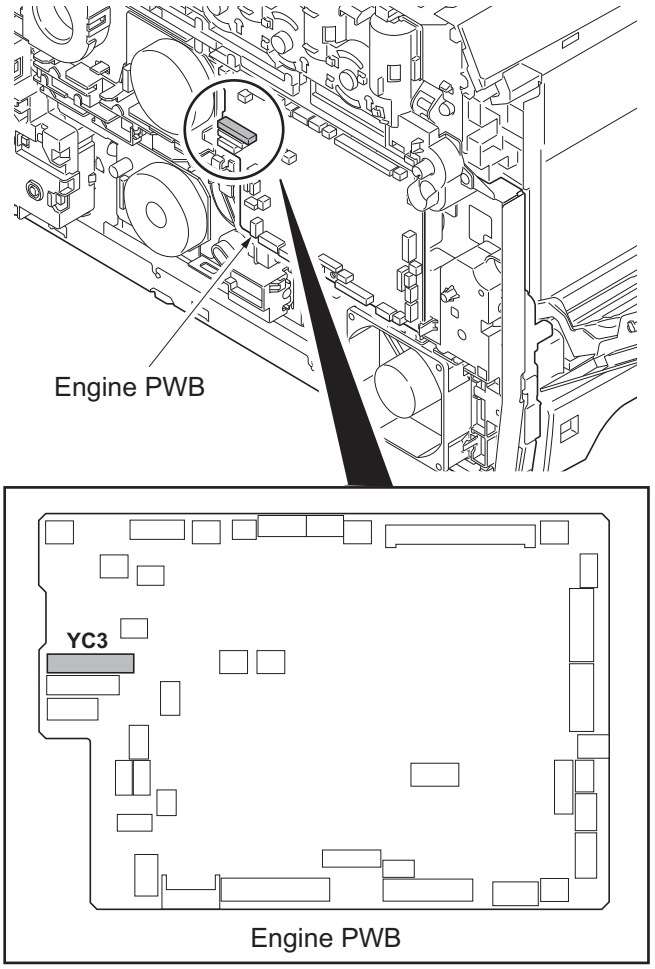

Figure 1-5-60

4. Remove four screws and then remove the paper feed drive unit.
5. Check or replace the paper feed drive unit and refit all the removed parts.

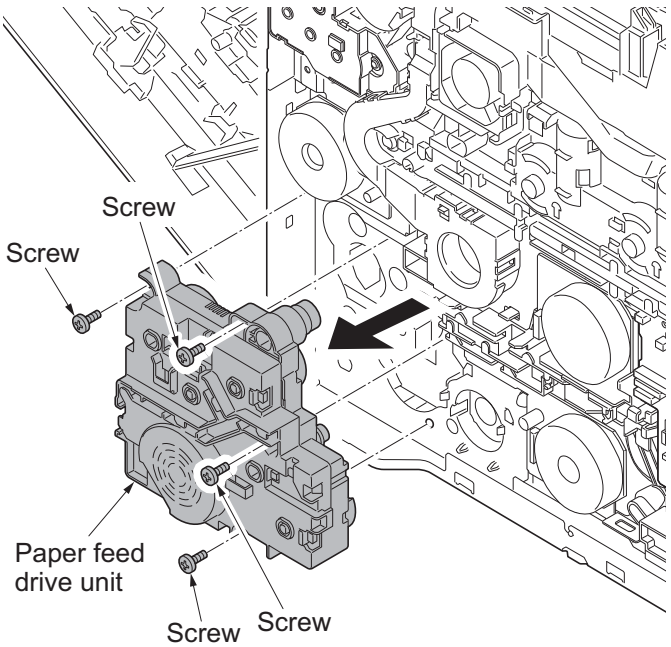

Figure 1-5-61

(4) Detaching and refitting the fuser pressure drive unit

Procedure

1. Remove the fuser unit (see page 1-5-26).
2. Remove the rear upper cover, right upper cover, left upper cover and front cover (see page 1-5-3).
3. Remove the left rear cover and left cover (see page 1-5-9).
4. Remove connector (YC38) from engine PWB.

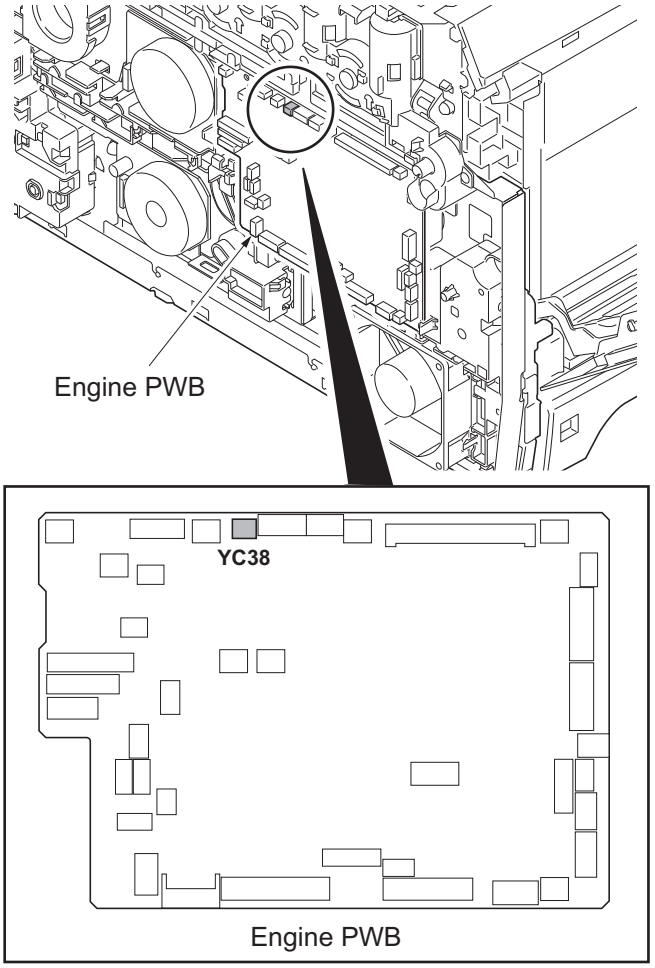

Figure 1-5-62

5. Remove the developing fan unit (see page 1-5-38).
6. Remove three screws.
7. Release two hooks remove the fuser pressure drive unit.
8. Check or replace the fuser pressure drive unit and refit all the removed parts.

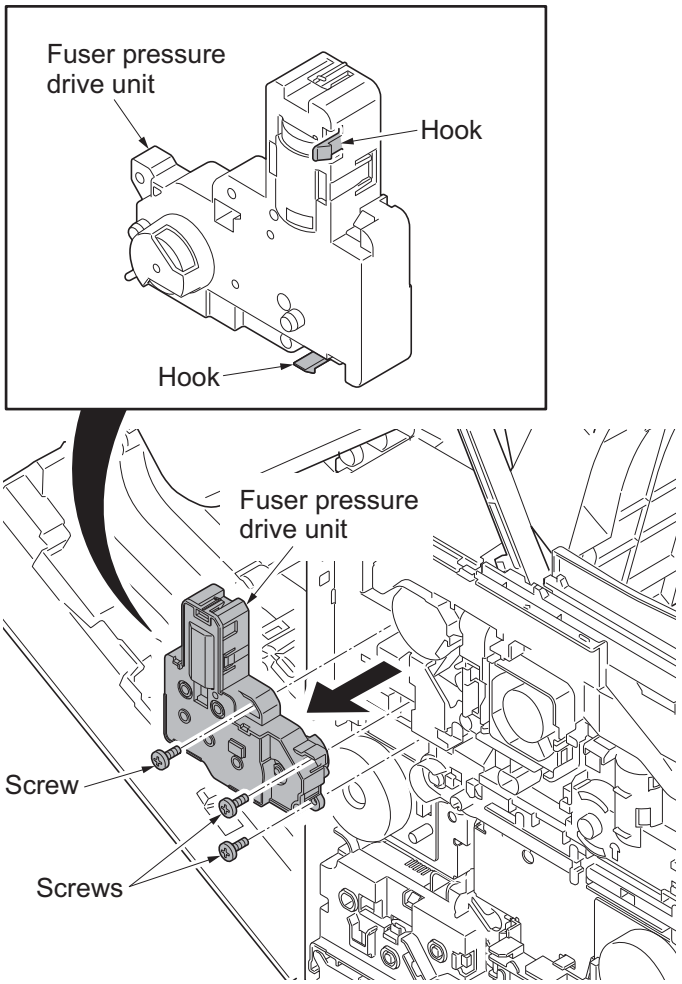

Figure 1-5-63

(5) Detaching and refitting the middle transfer drive unit

Procedure

1. Remove the intermediate transfer unit (see page 1-5-22).
2. Remove the rear upper cover, right upper cover, left upper cover and front cover (see page 1-5-3).
3. Remove the left rear cover and left cover (see page 1-5-9).
4. Remove the fuser pressure drive unit (see page 1-5-41).
5. Remove connector (YC15) from engine PWB.

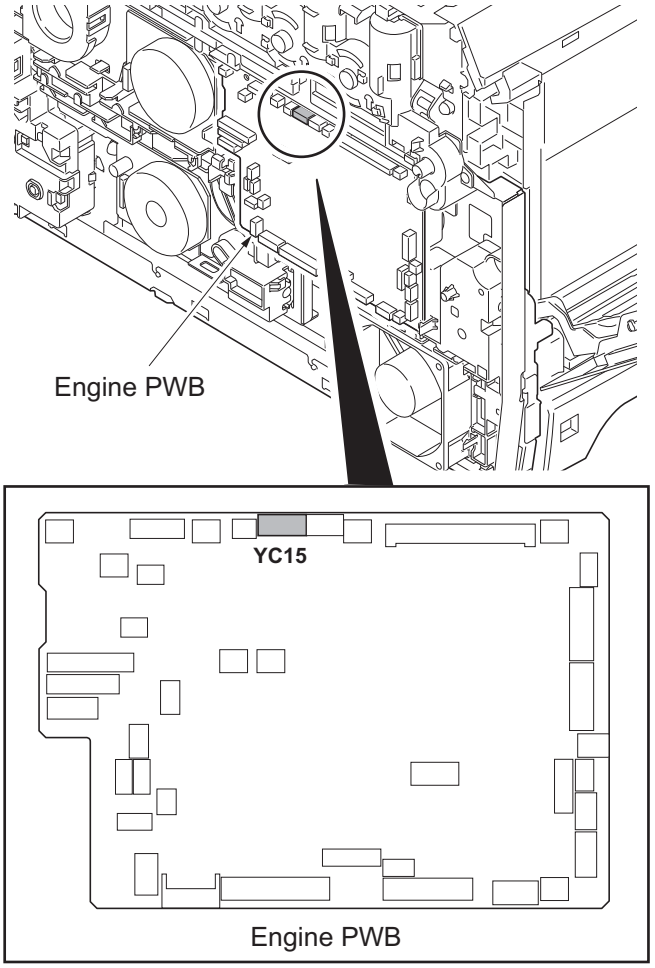

Figure 1-5-64

6. Remove the screw and then remove the ID guide.

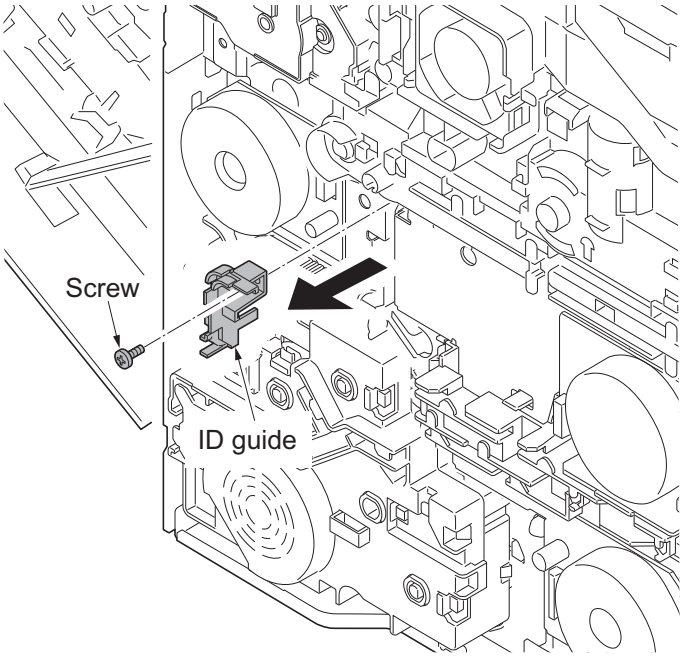

Figure 1-5-65

7. Remove three screws and then remove the middle transfer drive unit.
8. Check or replace the middle transfer drive unit and refit all the removed parts.

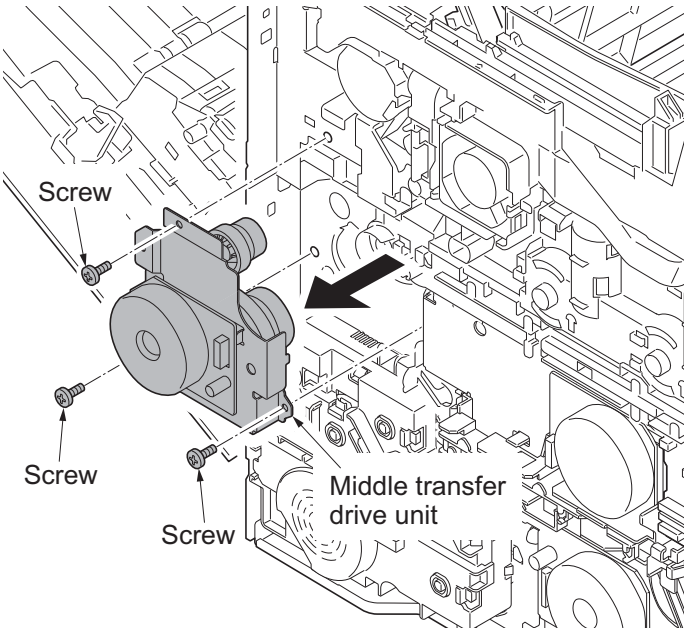

Figure 1-5-66

1-5-10 Optical section

(1) Detaching and refitting the laser scanner unit

Procedure

1. Remove the intermediate transfer unit (see page 1-5-22).
2. Remove drum units (K, M, C, Y) and developing units (K, M, C, Y) (see page 1-5-21, 19).
3. Remove the rear upper cover, right upper cover, left upper cover and front cover (see page 1-5-3).
4. Remove the left rear cover and left cover (see page 1-5-9).
5. Remove two connectors (YC32, YC32) from engine PWB.

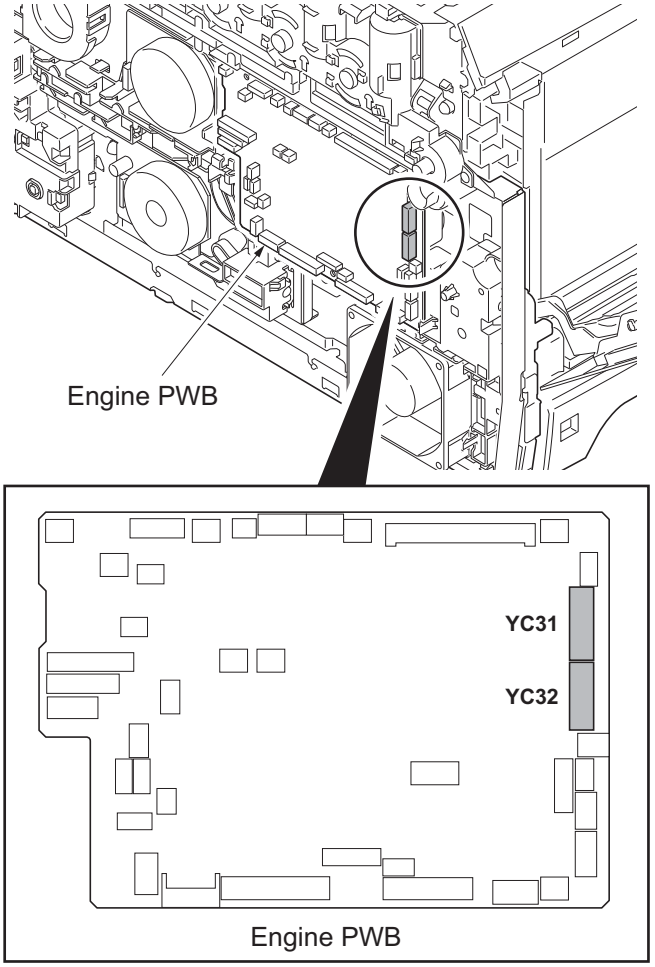

Figure 1-5-67

6. Draw two connectors (YC31, YC32) into the machine inside.

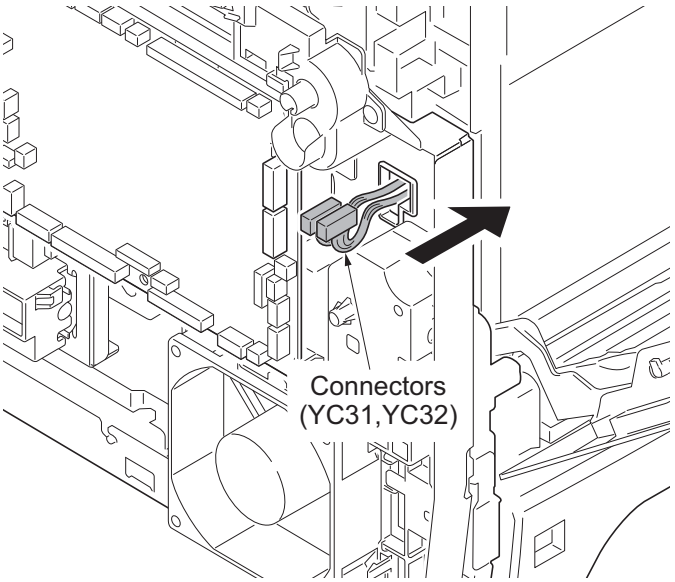

Figure 1-5-68

7. Remove the right rear cover, right cover and right lower cover (see page 1-5-6).
8. Remove the controller shield (see page 1-5-30).
9. Remove two connectors (YC38, YC40) from main PWB.

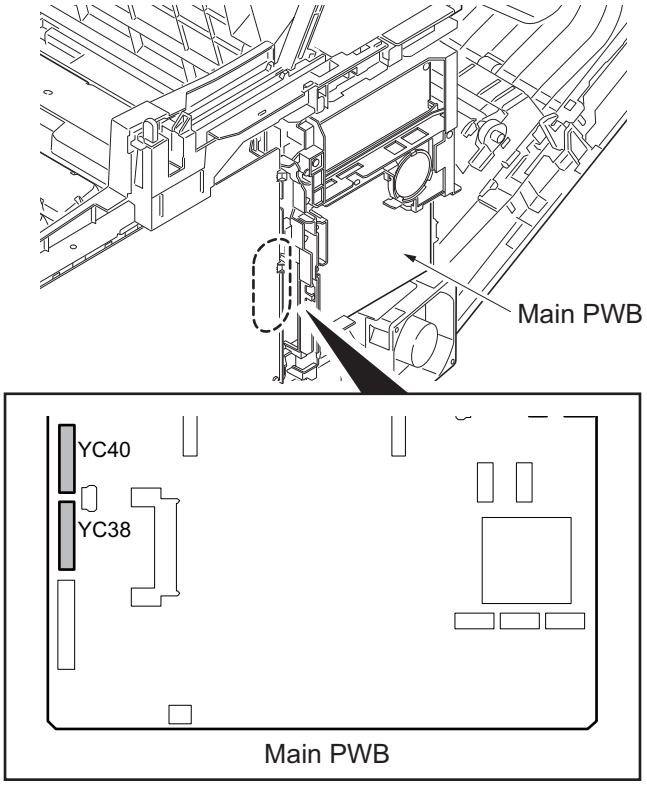

Figure 1-5-69

10. Draw two connectors (YC38, YC40) into the machine inside.

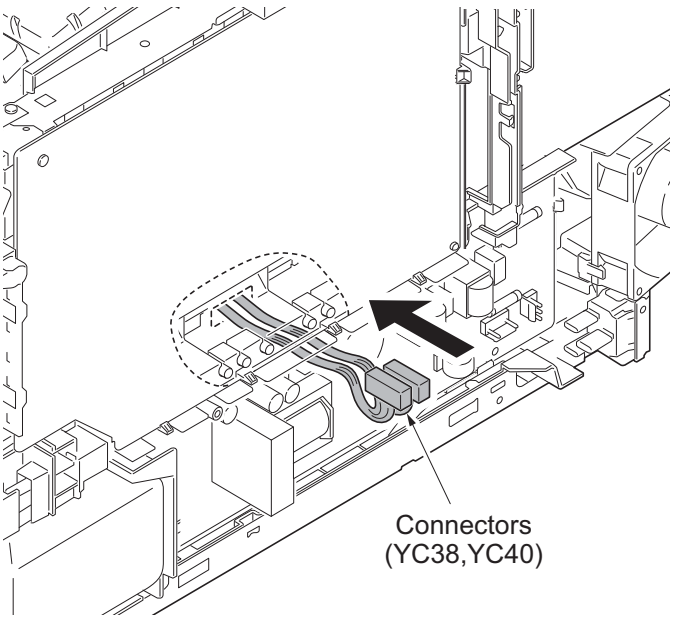

Figure 1-5-70

11. Remove each three screws and then remove laser scanner unit (KM, CY).
12. Check or replace the laser scanner unit and refit all the removed parts.

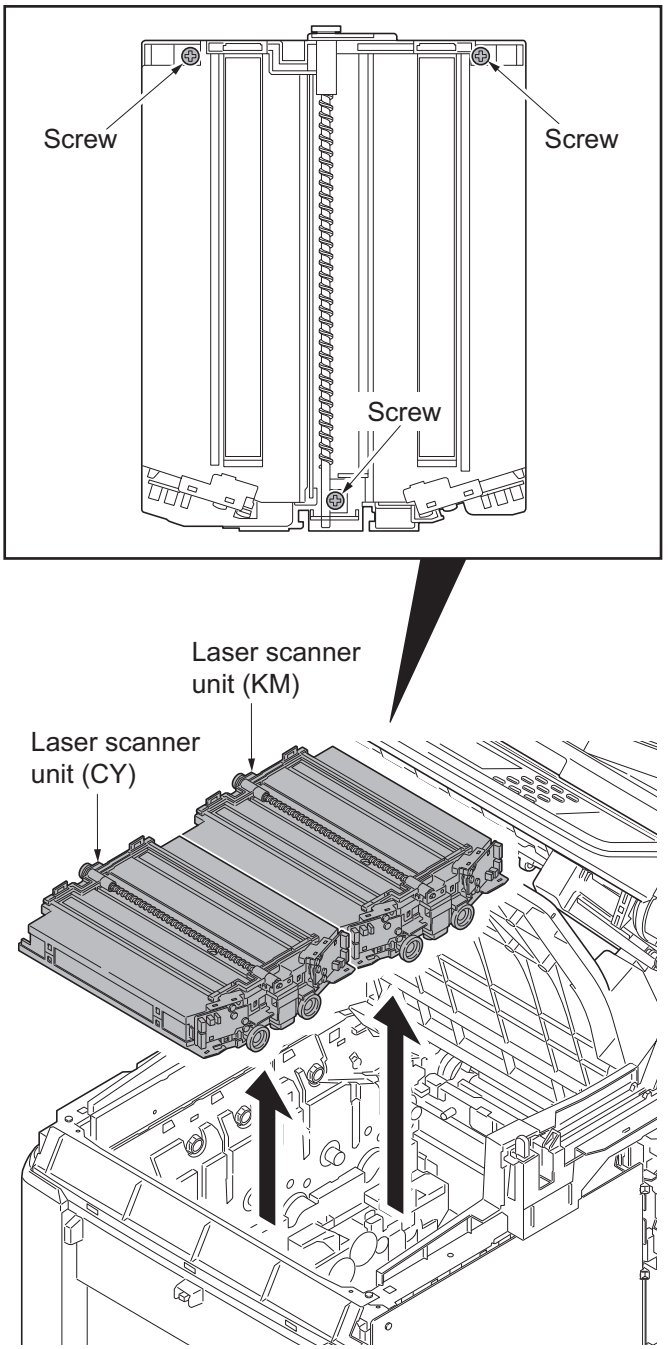

Figure 1-5-71

(2) Detaching and refitting the scanner unit

Procedure

1. Remove the document processor (see page 1-5-78).
2. Remove the connector (YC36) and two FFCs (YC8, YC43) from main PWB.
3. Open the scanner unit.

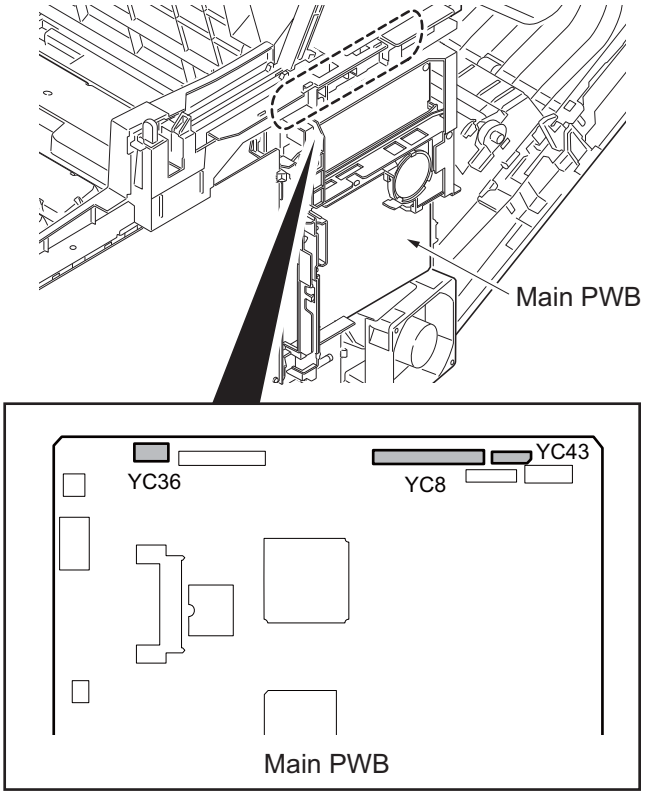

Figure 1-5-72

4. Remove the motor wire, CCD wire and operation panel wires from the wire holder.

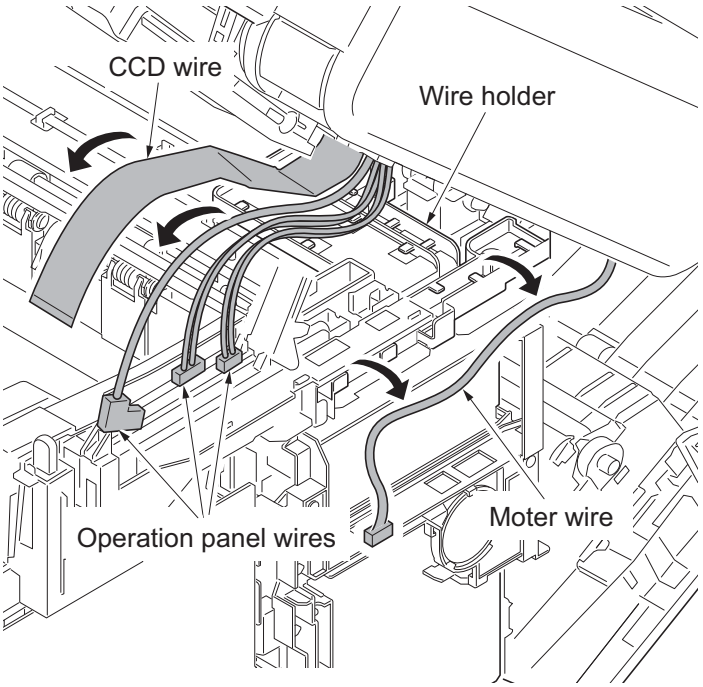

Figure 1-5-73

5. Release each four hooks and then remove left and right rails.

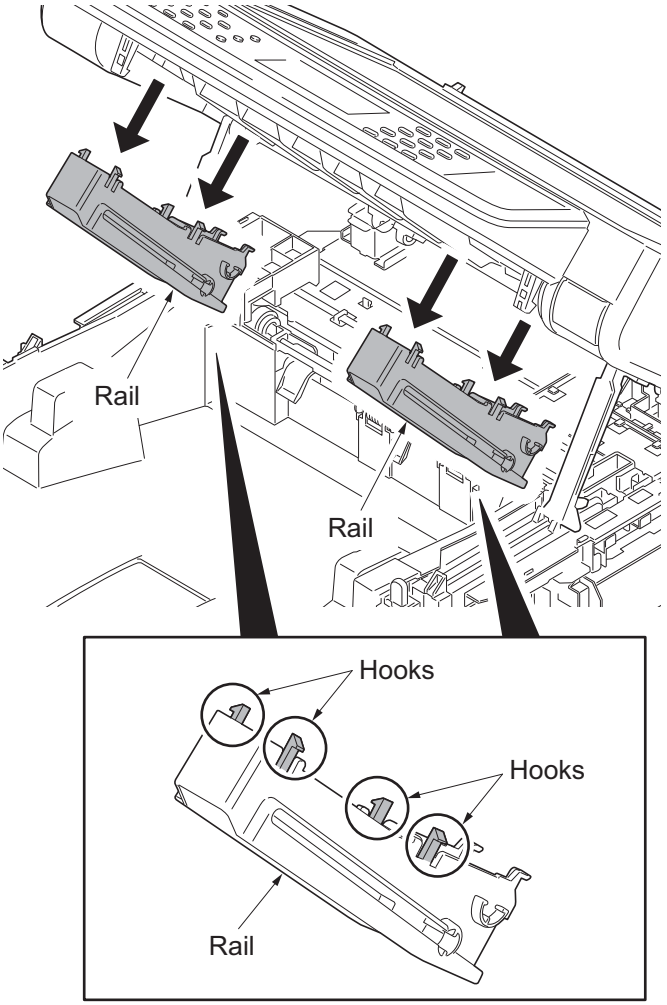

Figure 1-5-74

6. Remove two springs from left and right rails.

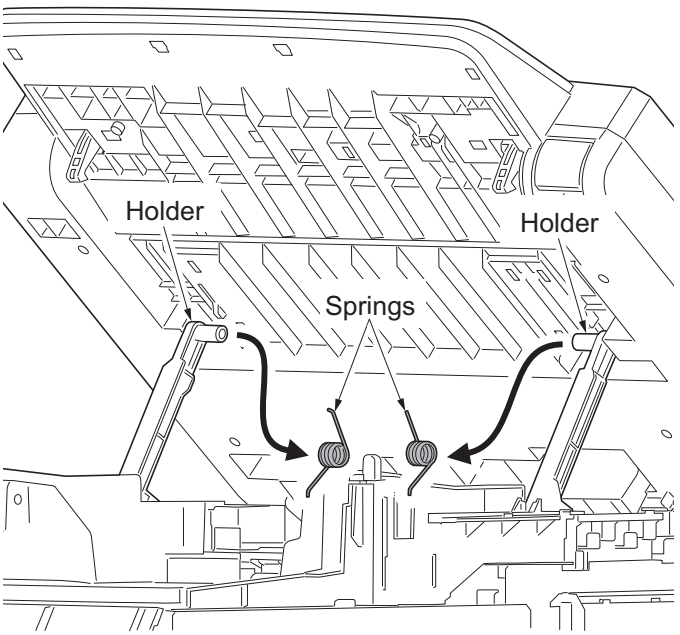

Figure 1-5-75

7. Remove left and right rails from the scanner unit.

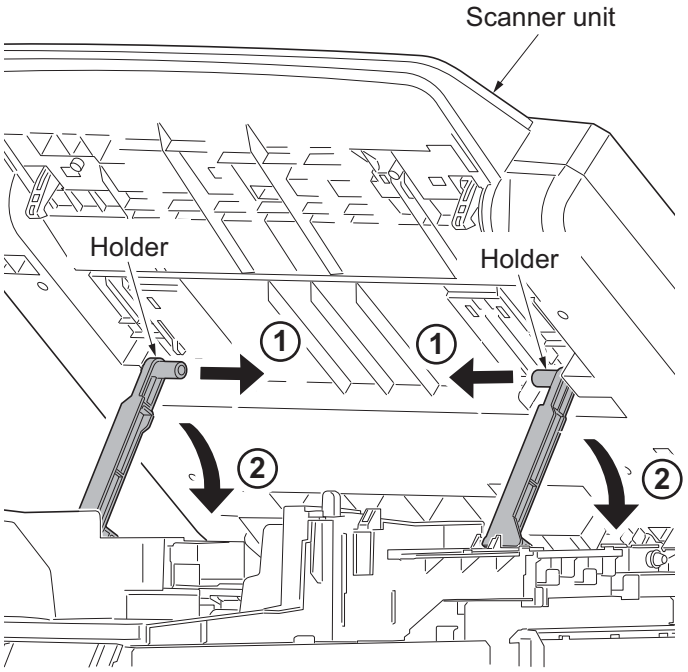

Figure 1-5-76

8. Remove the spring and then pull right and left pin out.

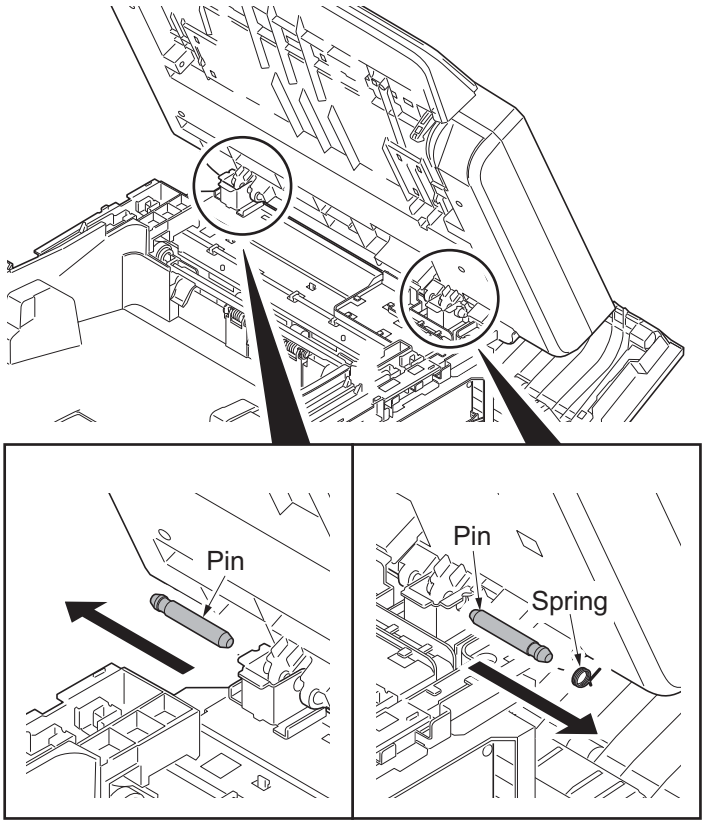

Figure 1-5-77

9. Remove the scanner unit.

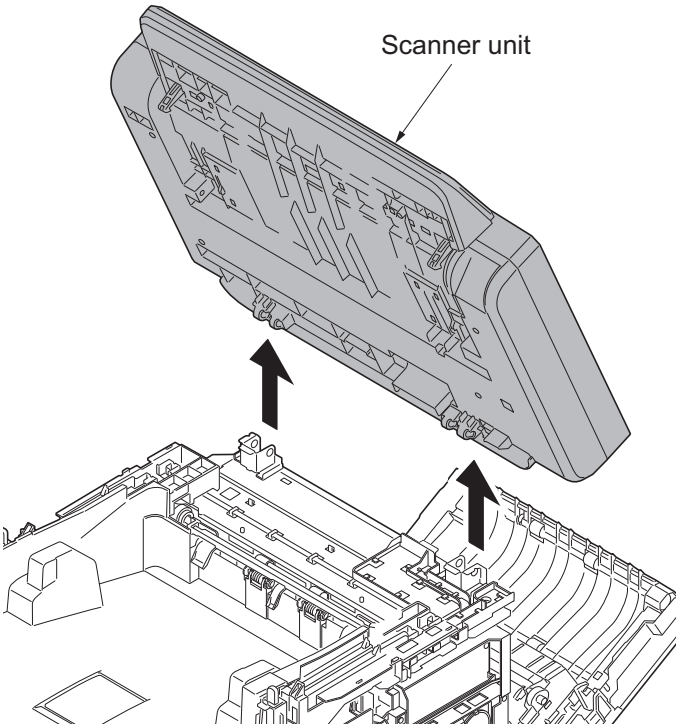

Figure 1-5-78

(3) Detaching and refitting the image scanner unit

Procedure

(Detach the covers)

1. Open the paper conveying unit.
2. Release the hook and then remove the IF cover.

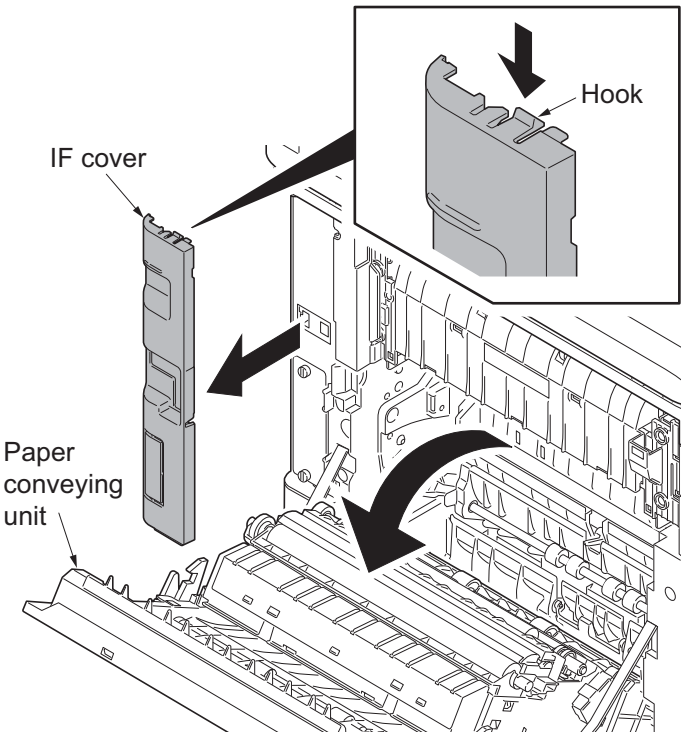

Figure 1-5-79

3. Remove two screws and then remove the rear uppercover.

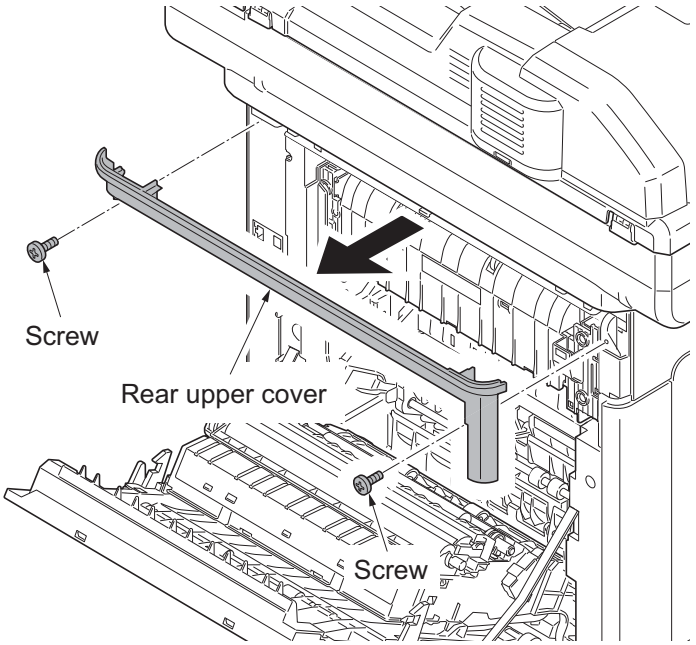

Figure 1-5-80

4. Pull the inner tray lever and open the inner tray.
5. Release two hooks. Slide the right upper cover backward and then remove it.

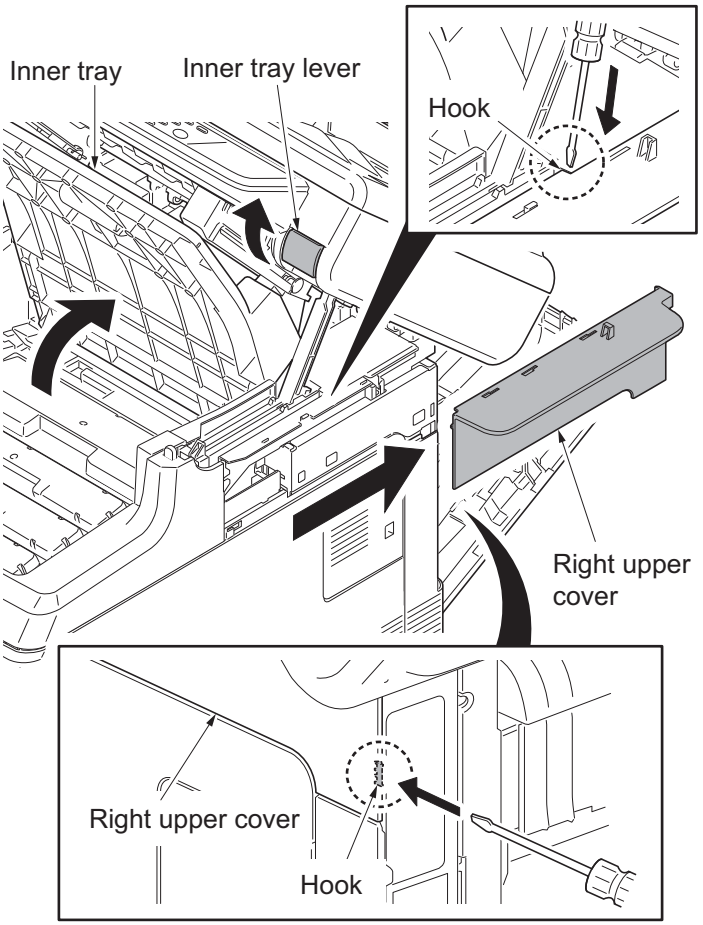

Figure 1-5-81

6. Release the hook. Slide the left upper cover backward and then remove it.

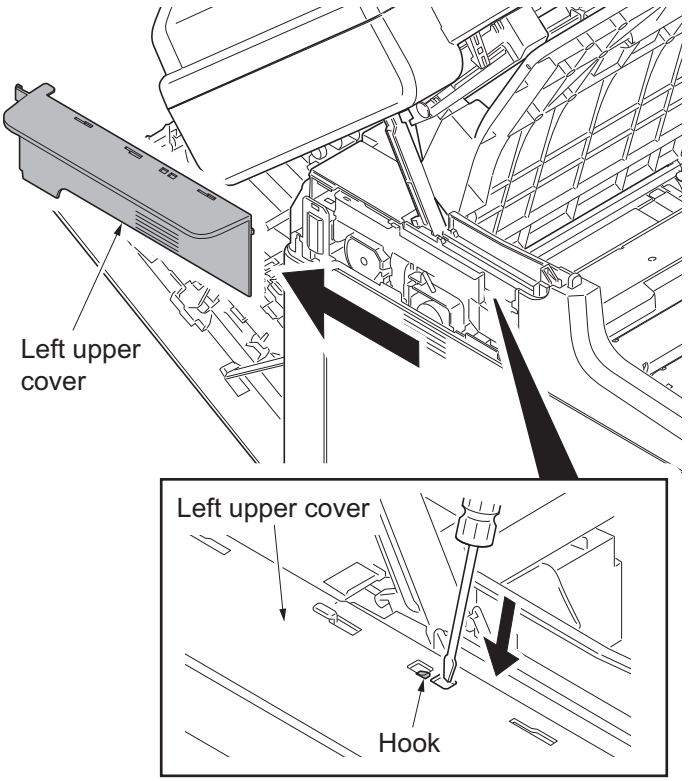

Figure 1-5-82

7. Release five hooks (hook A → B) and then remove the front cover.

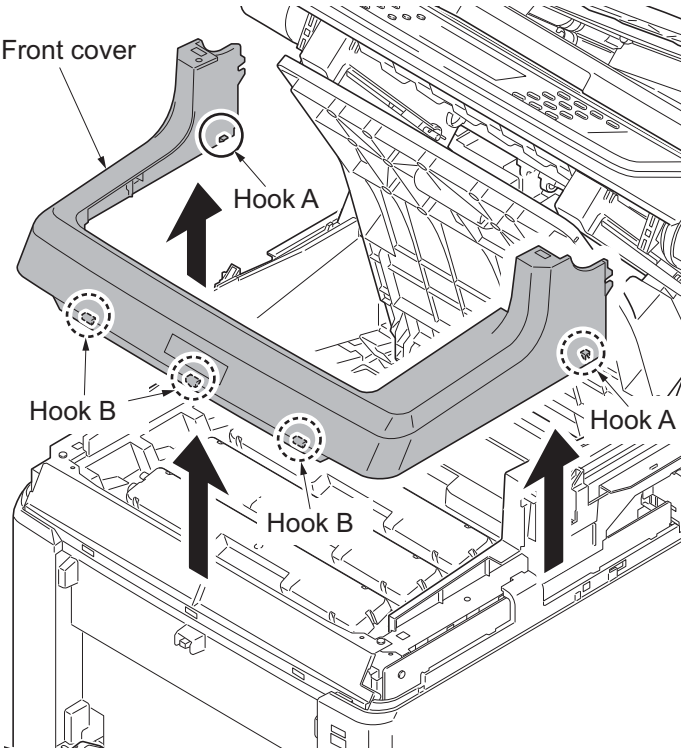

Figure 1-5-83

8. Slide the power source cover backward and then remove it.

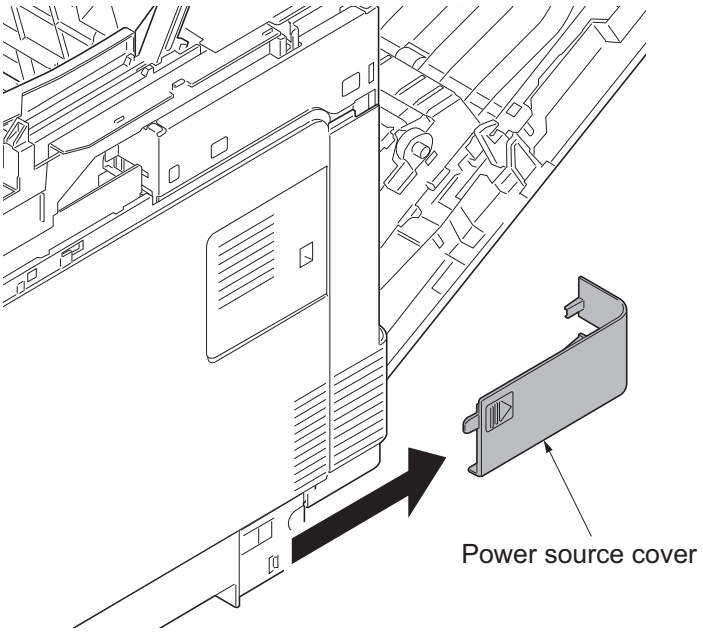

Figure 1-5-84

9. Remove the screw.
10. Release four hooks. Slide the right rear cover backward and then remove it.

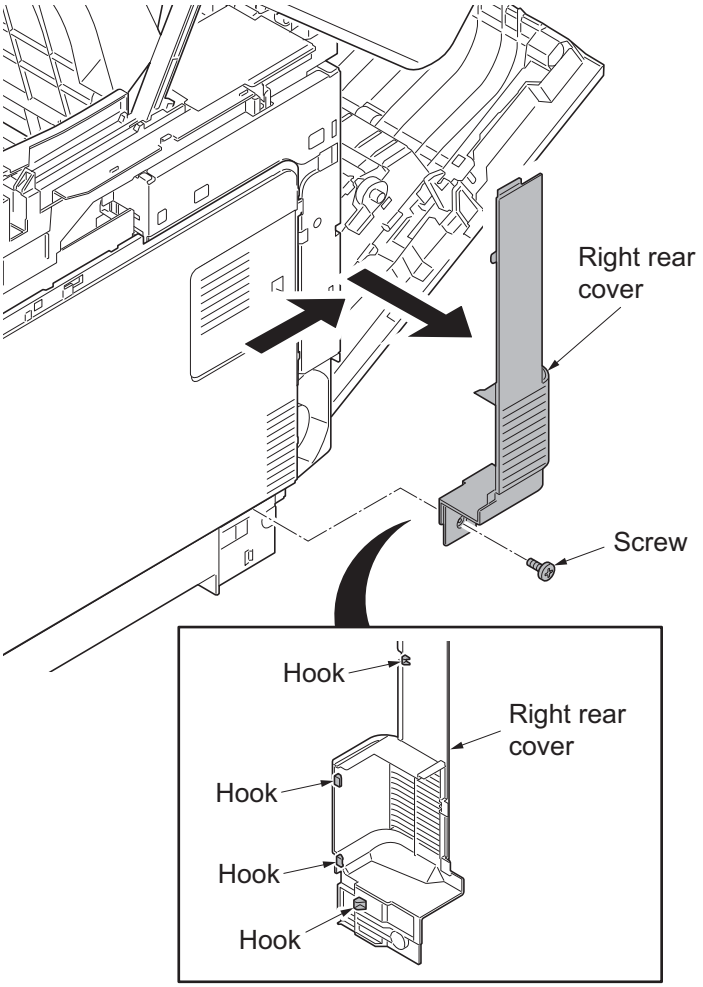

Figure 1-5-85

11. Open the memory cover and then remove it.

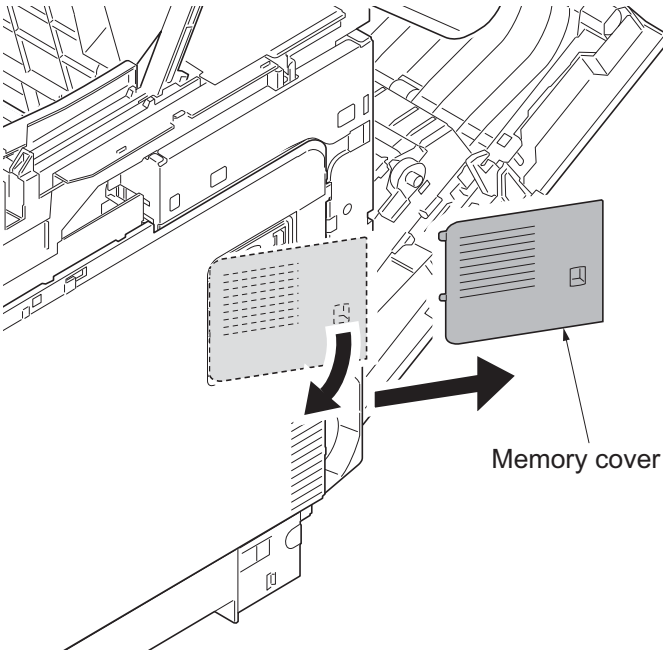

Figure 1-5-86

12. Open the waste toner cover.
13. Push the lock release button and then remove the waste toner box.
    (Close the cap of the waste toner box.)

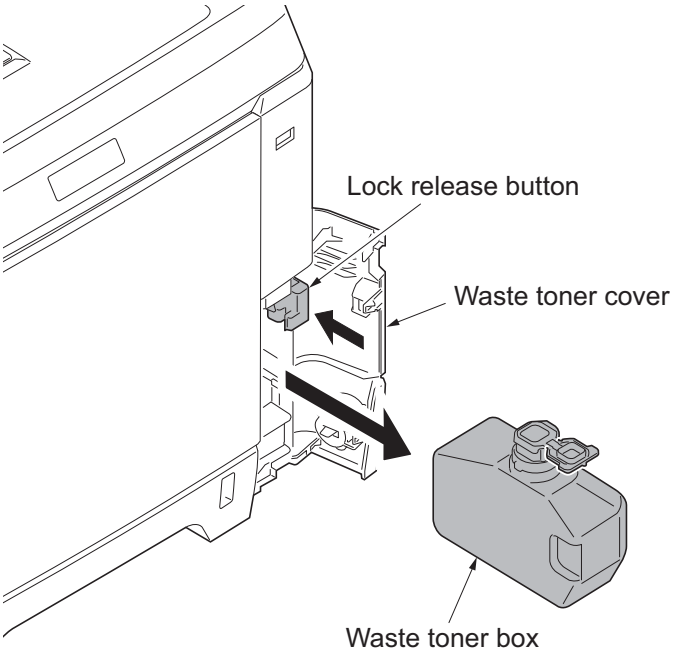

Figure 1-5-87

14. Open the MP tray.
15. Release four hooks (hook A → B→ C). Slide the right cover forward and then remove it.
16. Remove the waste toner cover.

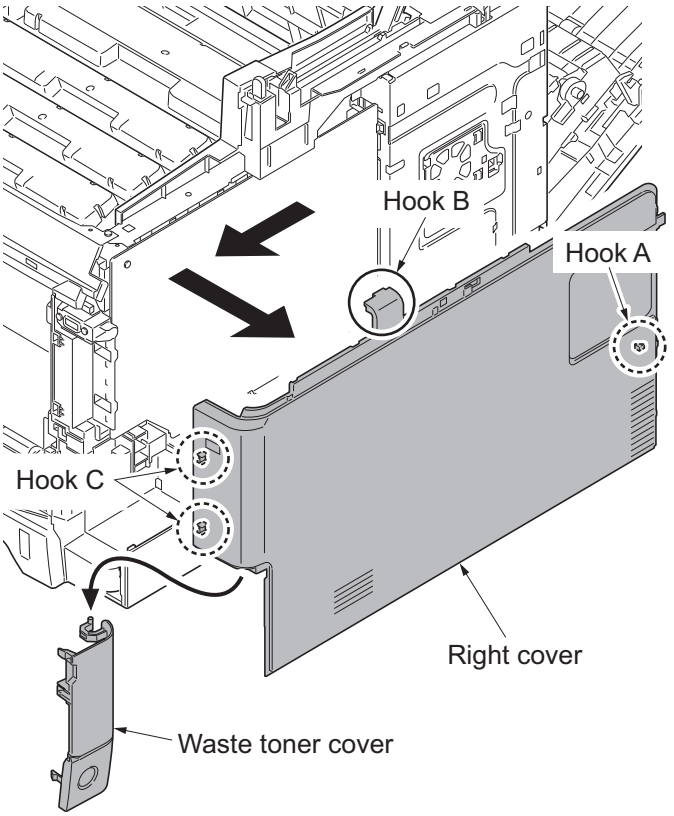

Figure 1-5-88

17. Release the hook. Slide the right lower coverforward and then remove it.

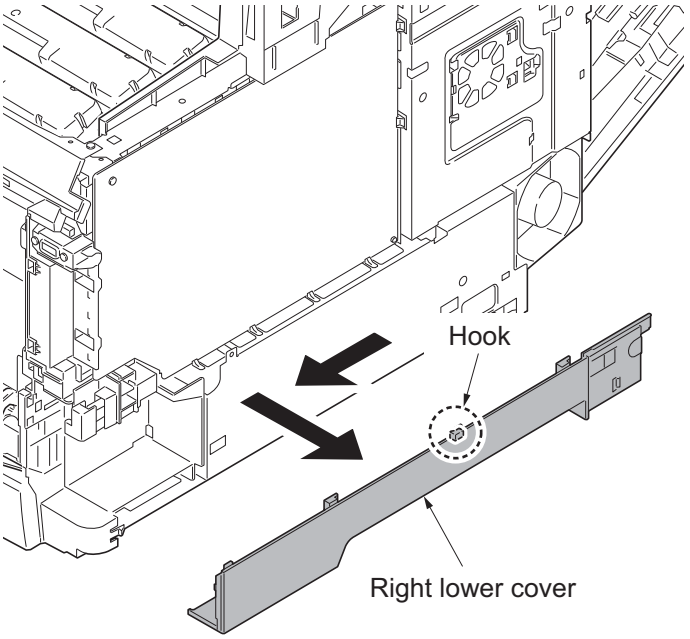

Figure 1-5-89

(Fully open the Document Processor and the scanner unit.)

18. Remove the left and right pins by pushing the pins out from inside while opening the top tray till the half way of the opening angle. (After this procedure, the top tray goes down and only the scanner unit opens.)

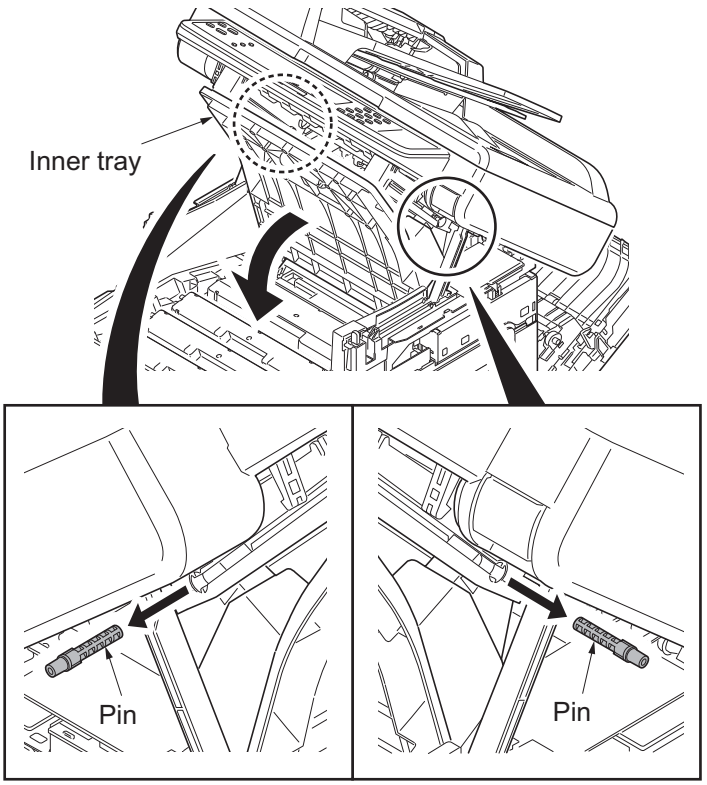

Figure 1-5-90

19. Release each four hooks and remove the left and right rails.

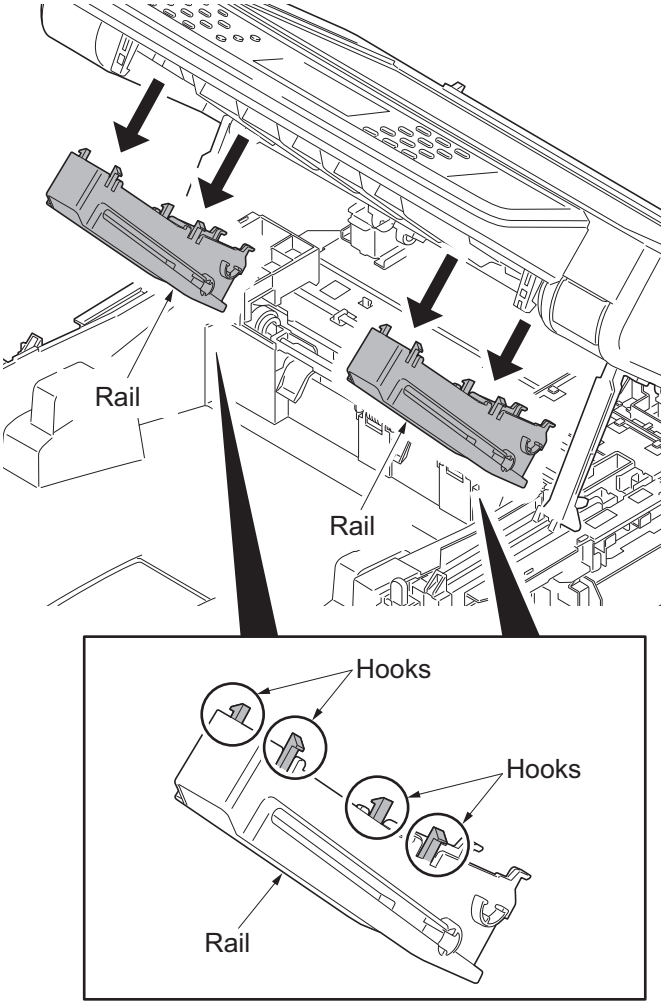

Figure 1-5-91

20. Remove two springs from the left and right holders.

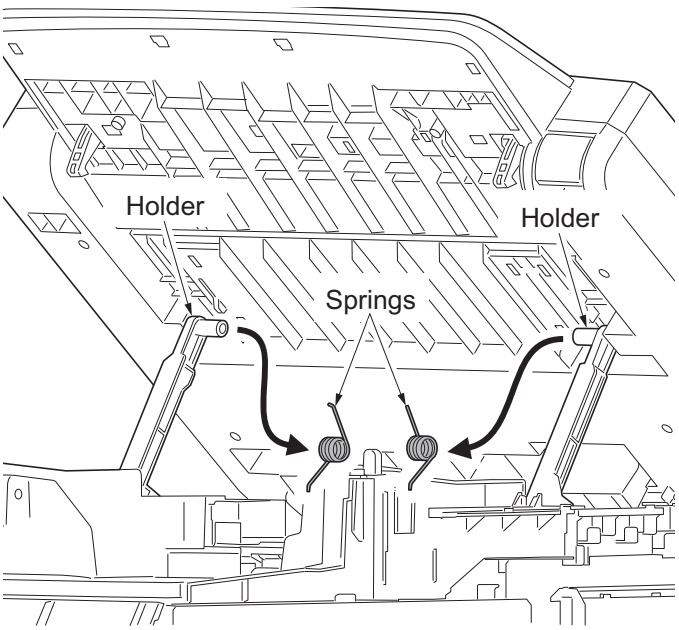

Figure 1-5-92

21. Remove left and right holders from the scanner unit.

*: When reattaching the holders in the scanner unit, assemble the parts so that the holders are in front of the triangle ribs of the ISU frame.
(If the holders are behind the triangle ribs, the scanner unit cannot be closed.)

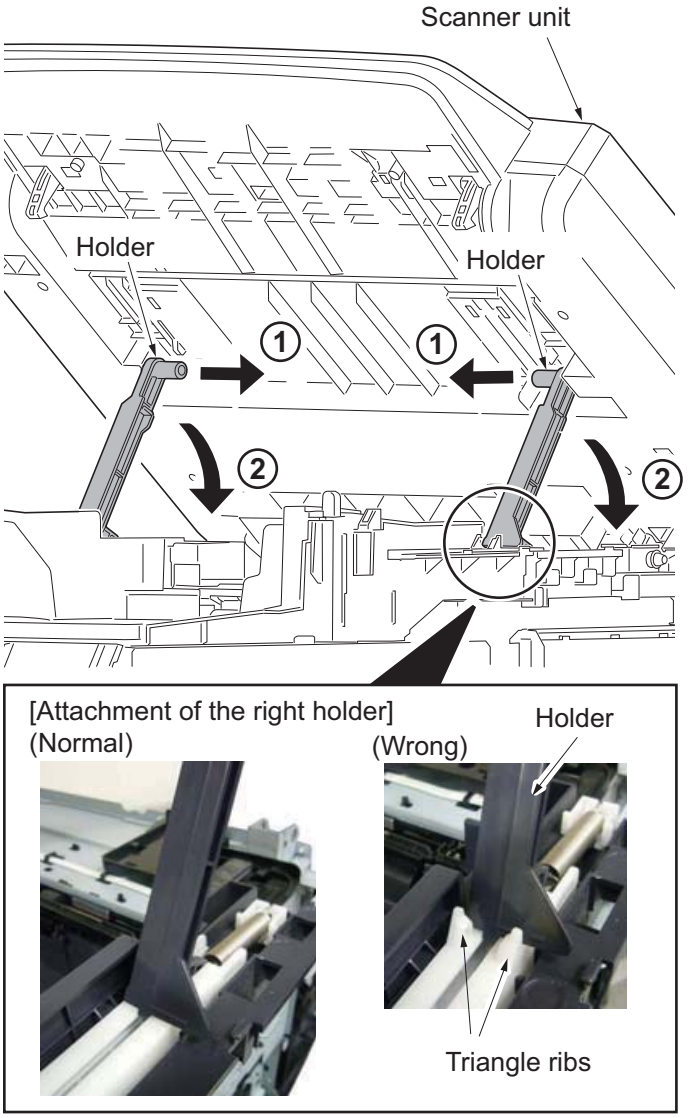

Figure 1-5-93

22. Release four hooks and remove the upper middle cover.

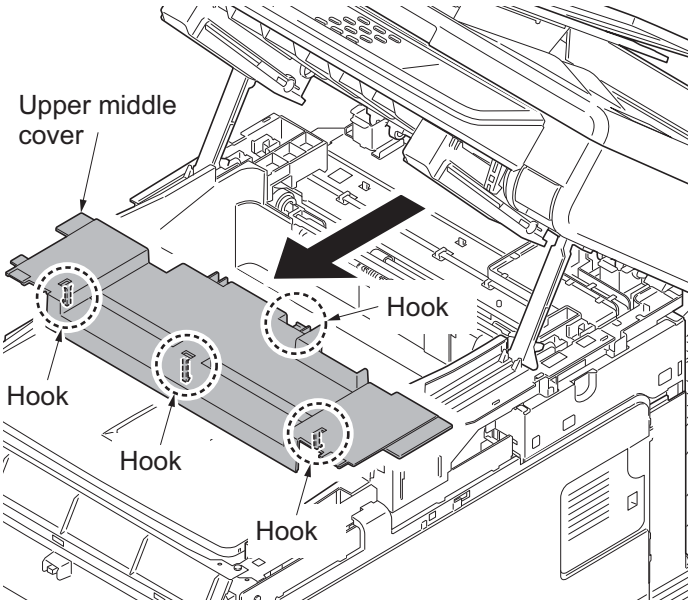

Figure 1-5-94

(Detach the high voltage PWB (HVU PWB).)

23. Remove the screw.
24. Release four hooks of the upside of the PWB circled in the figure and slant the upside of the high voltage PWB like opening it, and then remove the FFC.
25. After surely slanting the high voltage PWB till ninety degree, pull it out toward the machine right side.

*: If trying to pull out the PWB on the way of slanting till ninety degree, the hooks securing the PWB's low side may damage. (The hooks are circled at the figure.)

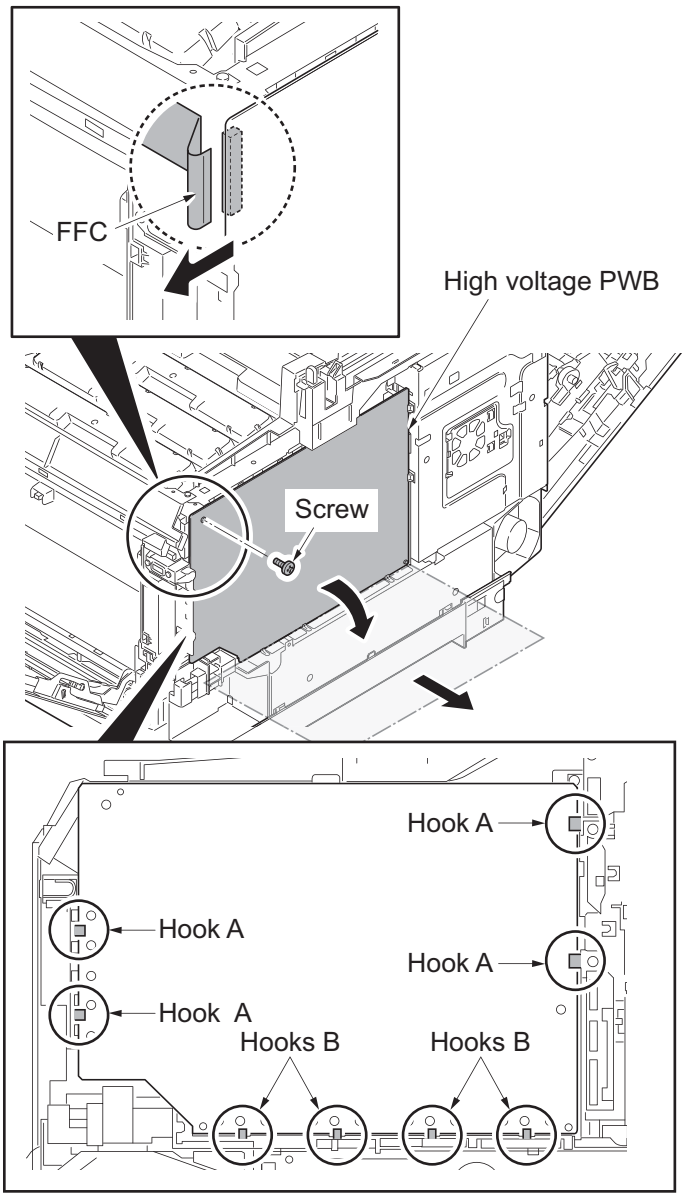

(Disconnect the connectors on the main PWB.)

[For the machine with FAX]

26. Remove two screws and then remove the FAX control PWB.

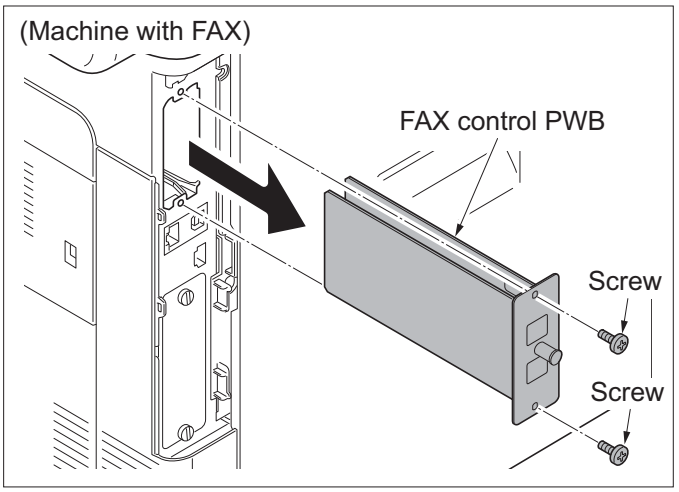

[For the machine with the hard disk or the network interface card]

27. Remove two pins and then pull out the hard disk or the network interface card.

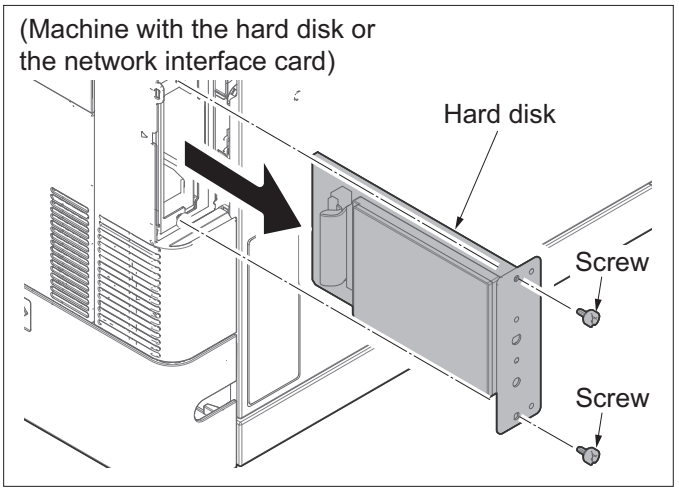

Figure 1-5-96

28. Remove four screws and then remove the power source shield.
    *: Screws A and B are unidentical, Thus, do not mix up.

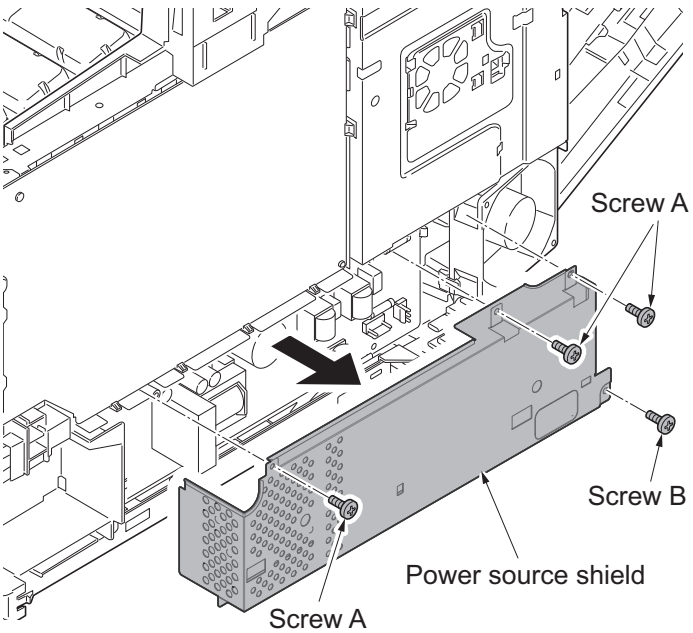

Figure 1-5-97

29. Pick up the hook A and then open the fan bracket.
30. Release the hook B and slide the fan plate to release the remaining three hooks, and then remove it.

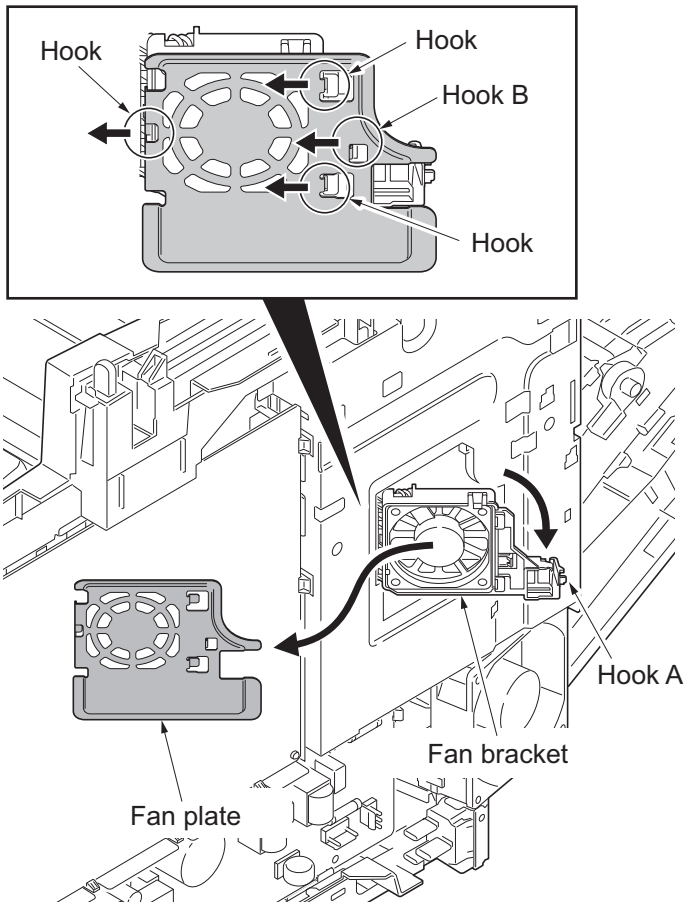

Figure 1-5-98

31. Remove the screw and remove the fuser wire cover.
32. Remove the cap.

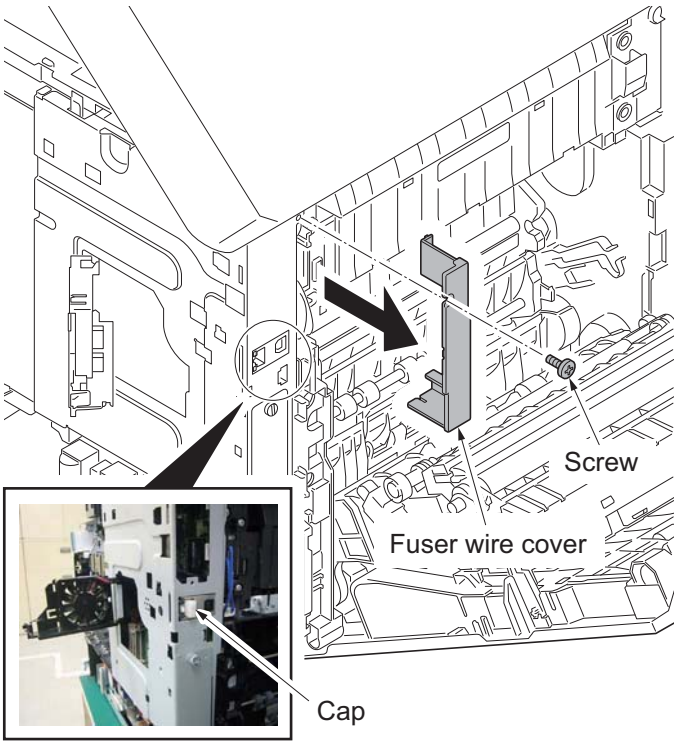

Figure 1-5-99

33. Remove five screws and the controller shield.

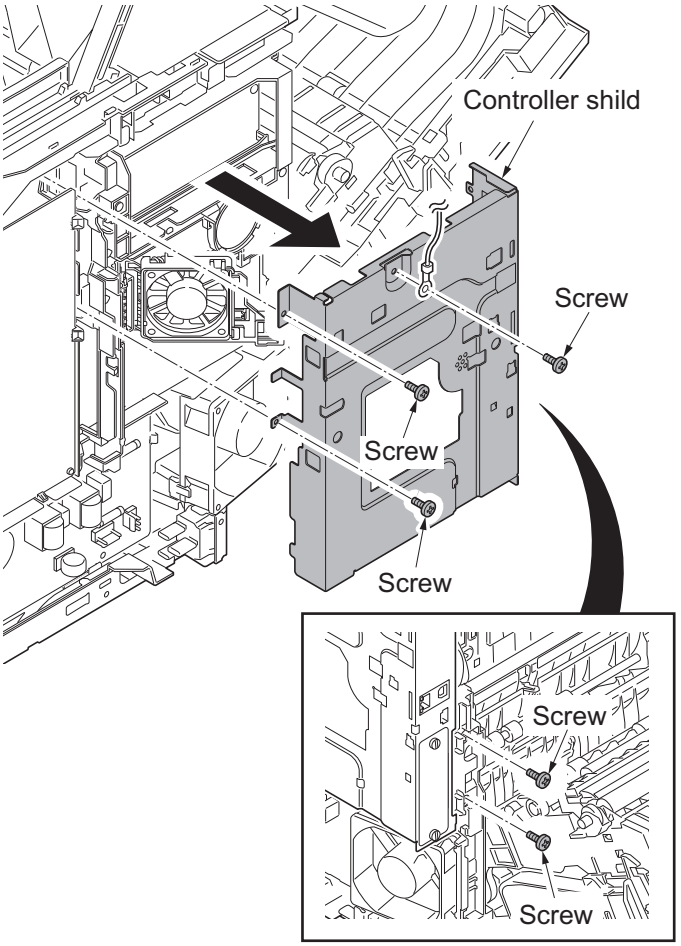

Figure 1-5-100

34. Disconnect the connector (YC41) of the controller fan motor.
35. Open the fan bracket and remove it.

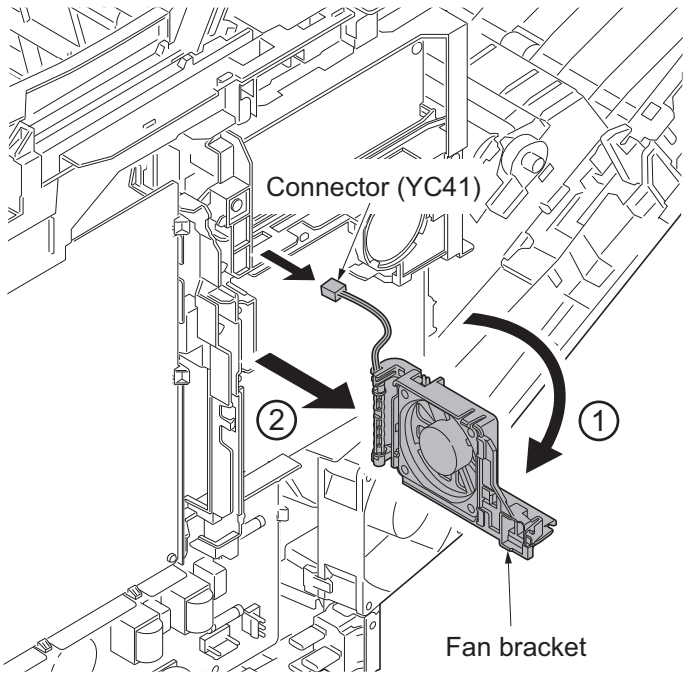

Figure 1-5-101

36. Disconnect the connectors (YC15, YC37, YC40,YC38, YC39, YC42) from the main PWB.
37. Loosen four screws fixing the machine rear side of the main PWB.
    *: Be sure to retighten the screws after reattaching the wire holder.

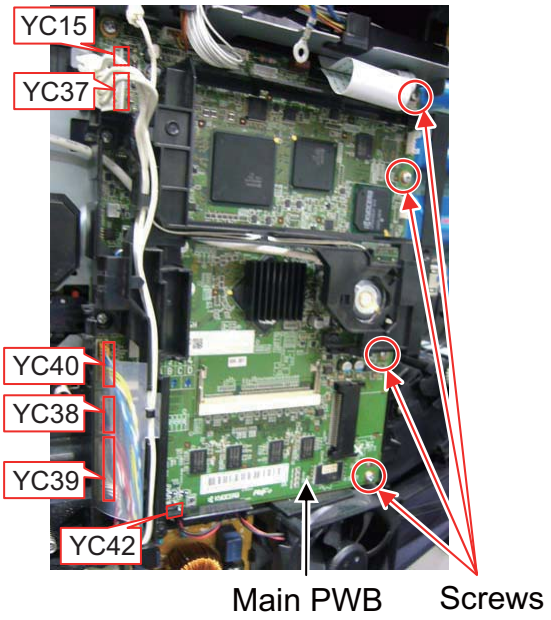

Figure 1-5-102

38. Remove the wires from the wire holder.
39. Remove two screws.
40. Release three hooks and then remove the wire holder.

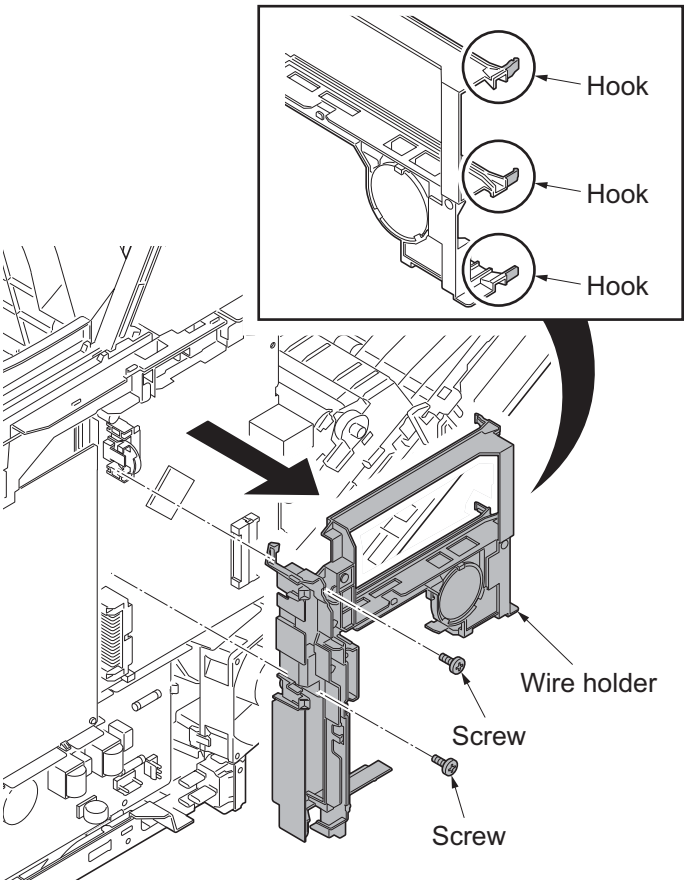

Figure 1-5-103

41. Disconnect the FFC wire at the connector YC8 on the main PWB.
    *: Reconnect the connectors on the main PWB before reattaching the wire holder detached at Step 40.

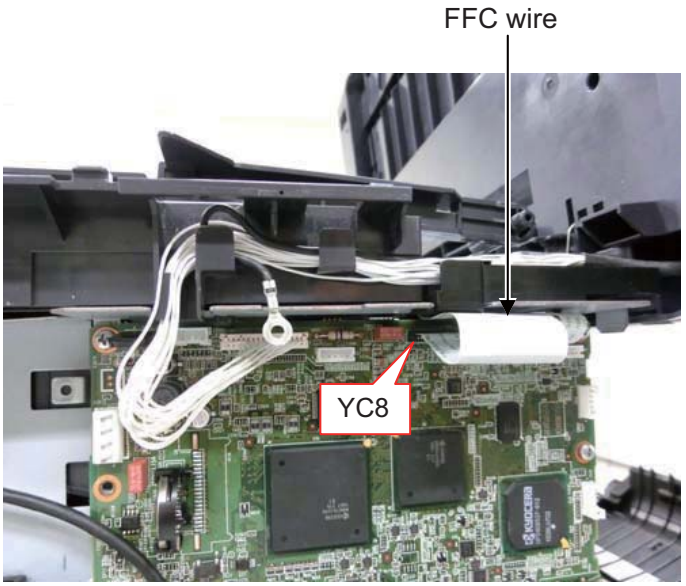

Figure 1-5-104

42. Remove the wire holder and the ferrite core.

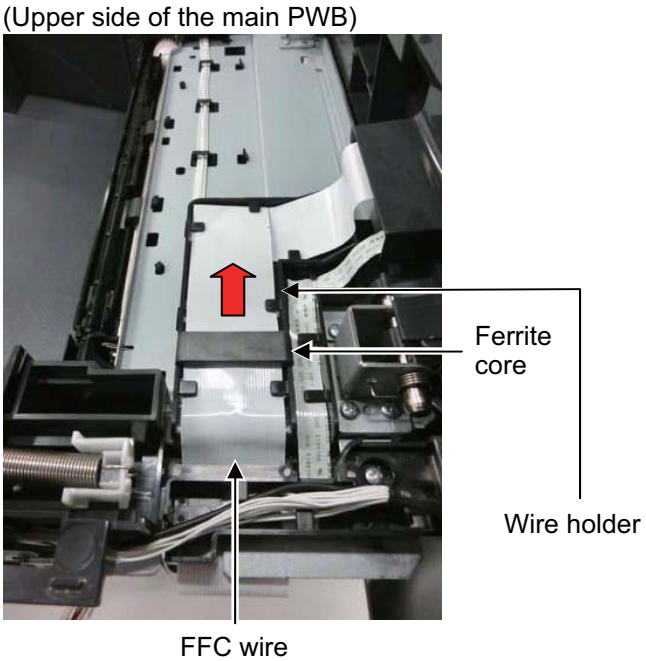

Figure 1-5-105

43. Reattach the left and right holders in a reverse manner of removal at Step 20, 21.
    Close the Document Processor and the scanner unit.

(Remove the ISU cover.)

44. Open the DP top cover and remove the screw fixing the DP rear cover.

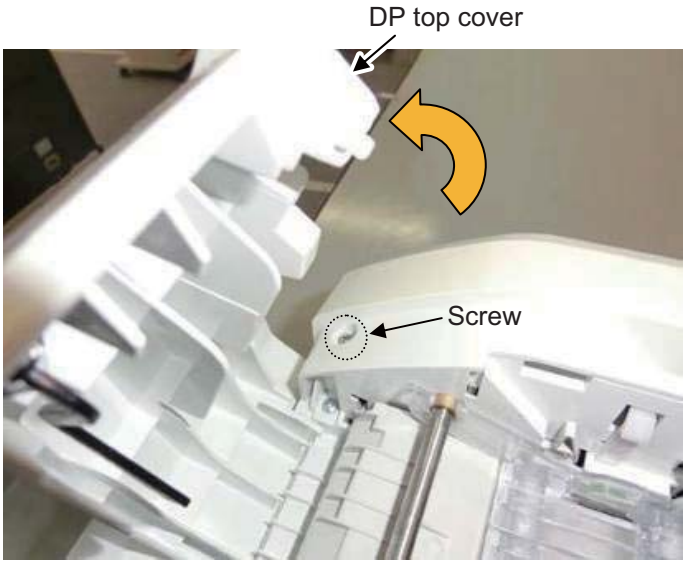

Figure 1-5-106

45. Open the Document Processor and release two hooks fixing the original tray.
And close the Document Processor.

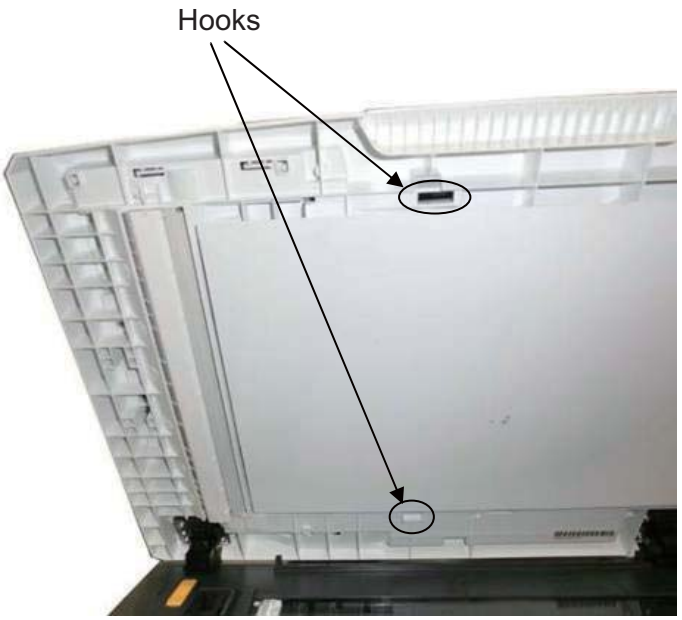

Figure 1-5-107

46. Slide the cursors to the center of the original tray and lift up the original tray.

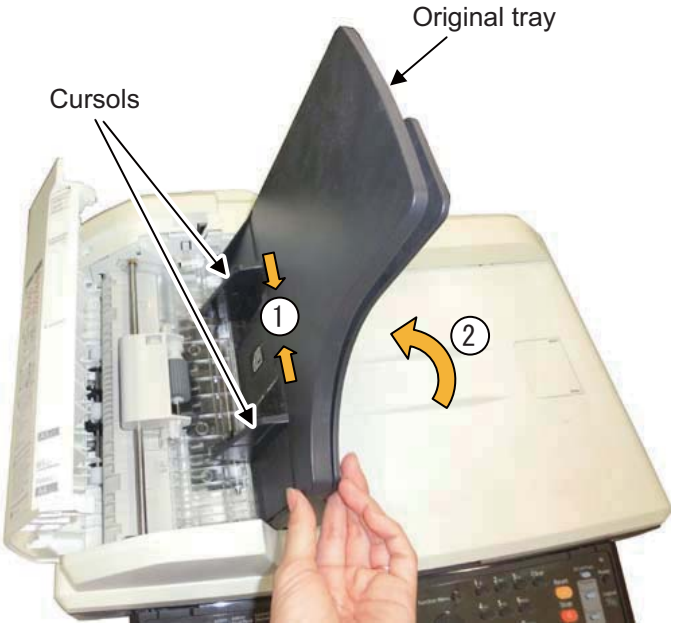

Figure 1-5-108

47. Release three hooks in the machine rear side of the DP rear cover. (in the order of hook A → B→ C)
    Release the hook D and E at the machine front side while rotating the DP rear cover in the arrow's direction and then remove it.
    *: Release the hook A, B and C while pressing the upper part of the hook to prevent the hook from breaking.

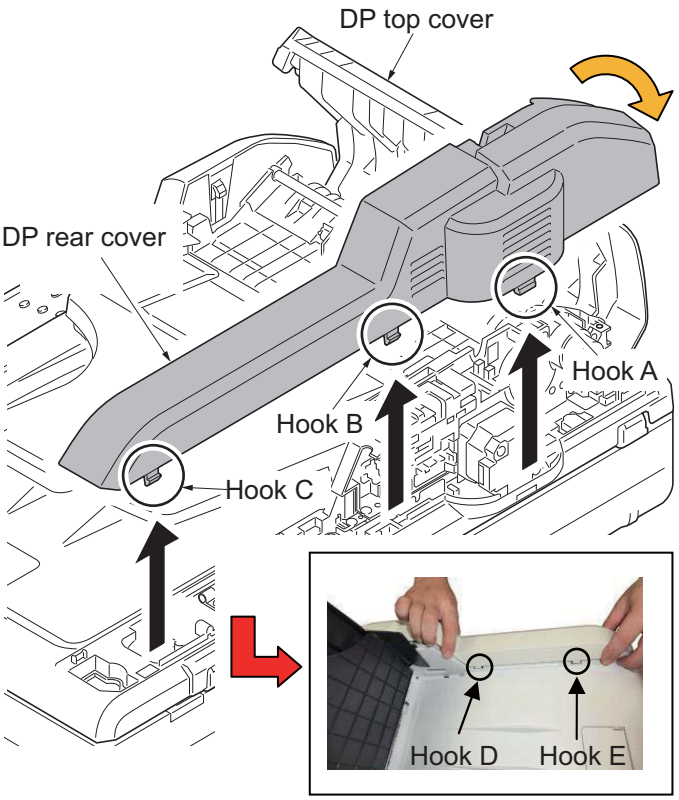

Figure 1-5-109

48. Remove two screws and disconnect two connectors from the DP drive PWB.

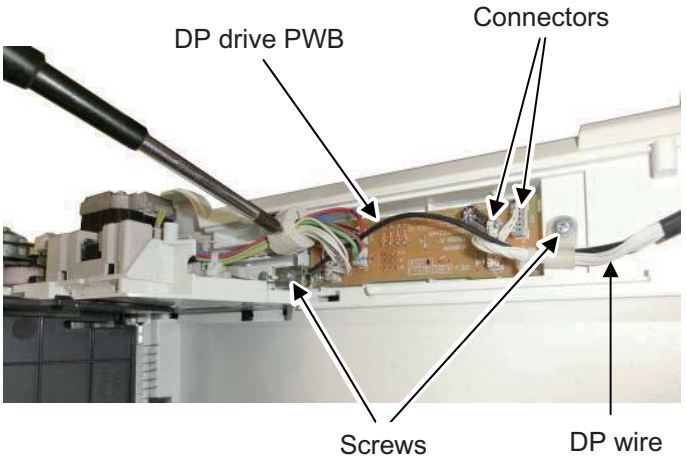

Figure 1-5-110

49. Press the DP lock lever through the hole at the bottom right side of the scanner unit by inserting a screwdriver, etc., and open the Document Processor.

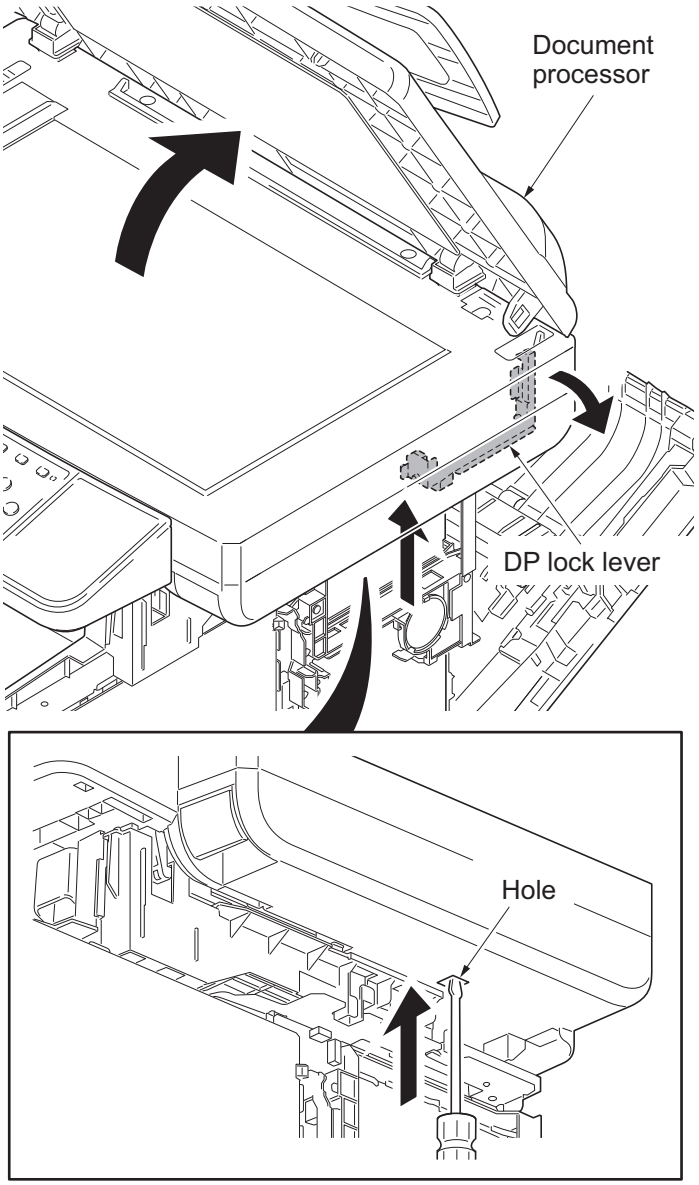

Figure 1-5-111

50. Remove the wire cover.

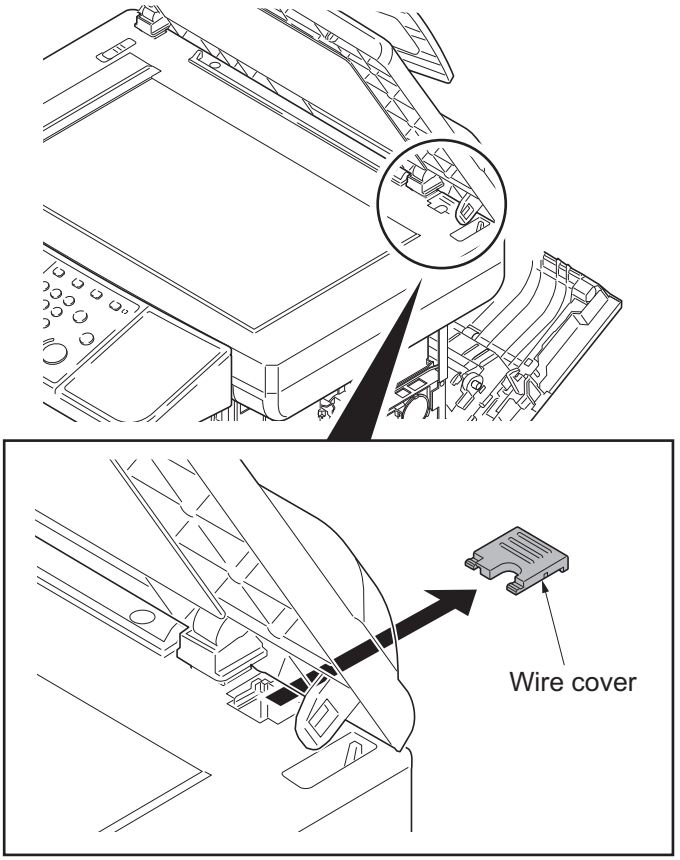

Figure 1-5-112

51. Detach the Document Processor.

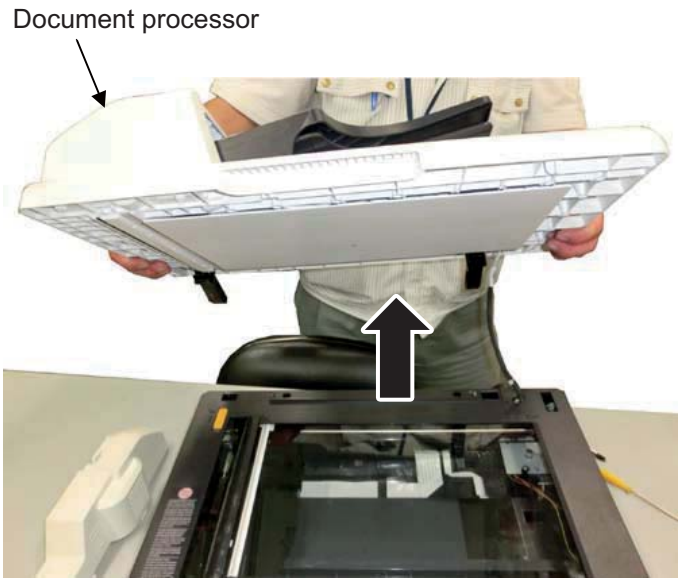

Figure 1-5-113

52. Remove the cover and panel and sheet on the operation unit in the order of A, B, C, D, E.
    Remove two screws and release three hooks and then forward slide the operation cover.
    *: Note not to break each of two hooks when detaching the panel C, D.

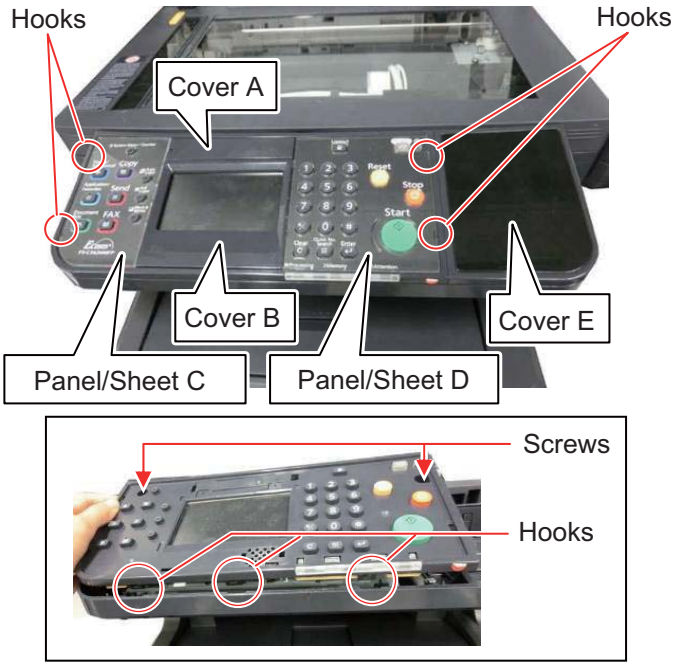

Figure 1-5-114

53. Remove two screws at the machine rear side and release three hooks under the operation cover.
    Remove the ISU cover while pushing the DP lock lever to the right using a flat-blade screw driver.
    *: Do not touch the inner side of the contact glass removed with the ISU cover. (Dirt adhered triggers the abnormal image.)

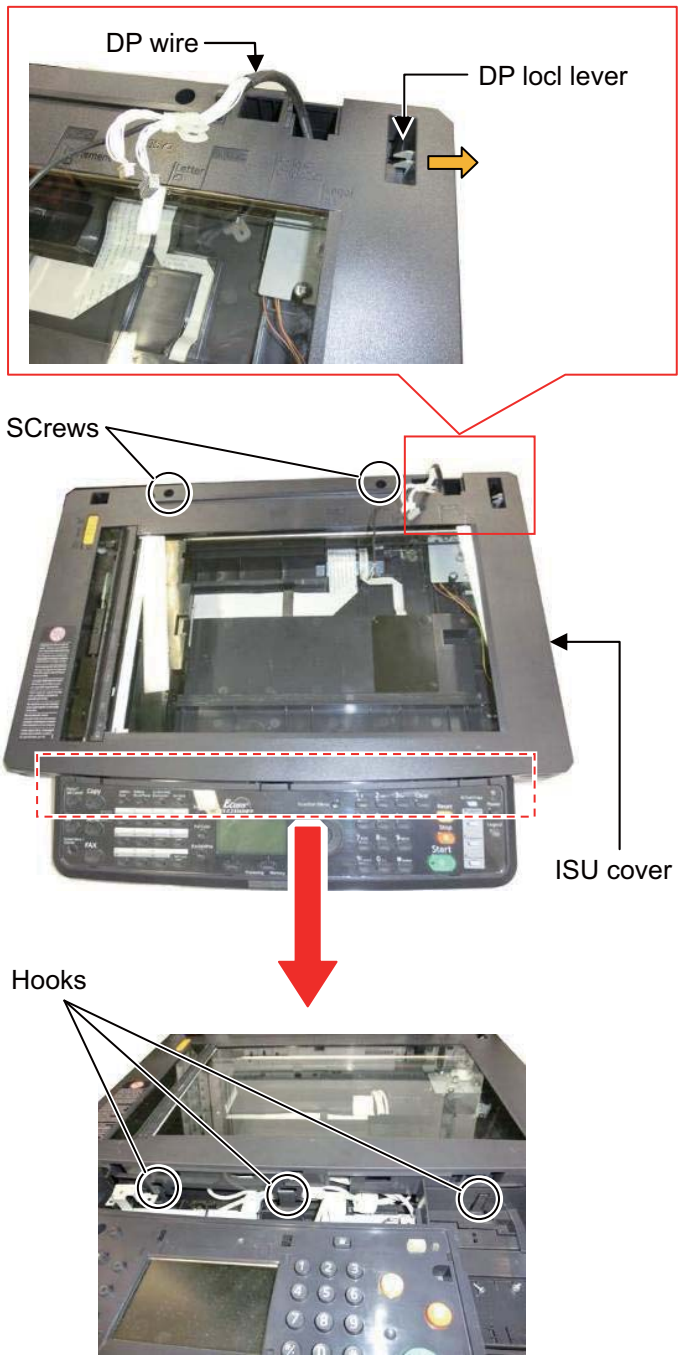

Figure 1-5-115

(Detaching the ISU)

54. Lift up the machine right end of the shaft to come off from the locking hole of the scanner frame, and then pull out the shaft in the machine right direction.
    *: Confirm the end of the ground spring surely fits the groove F of the shaft when reattaching.

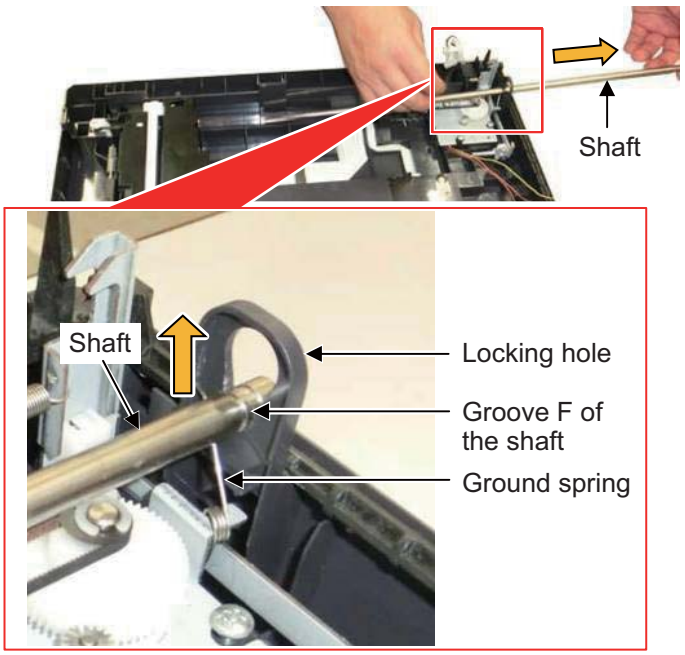

Figure 1-5-116

55. Slightly lift up the ISU and remove the ISU drive belt from the groove locking the ISU drive belt.

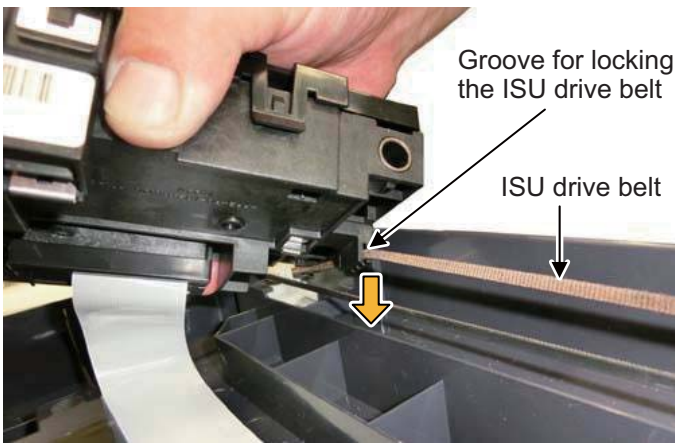

Figure 1-5-117

56. Remove the FFC wire connecting to the ISU from the wire alignment part in the scanner unit.
    Take off the bending part of the FFC wire from the two double-sided tapes on the wire alignment part.
    Detach the ISU.
    Then, peel off the double-sided tapes and clean the affixing part to remove the adhesive.

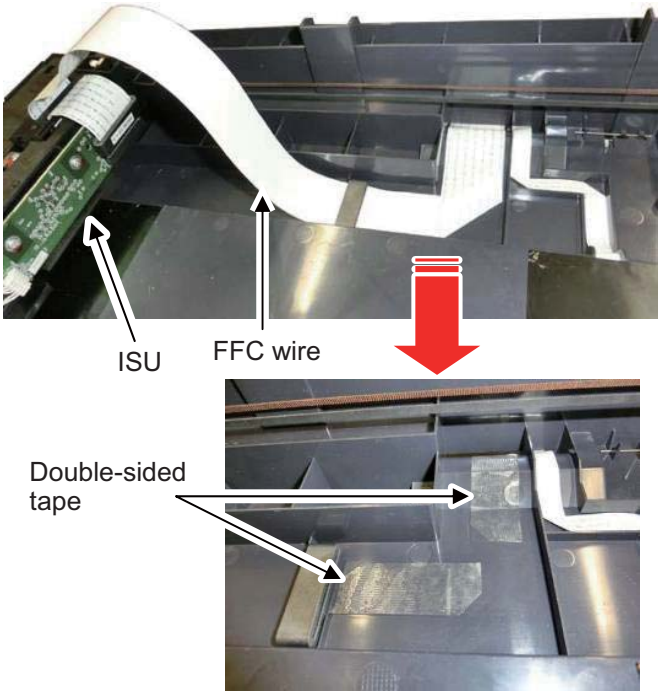

Figure 1-5-118

(Attaching the new ISU)

57. Fold the FFC wire of the new ISU with the alignment to the right.

(1)Fold the FFC wire in 90 degrees at 300mm from Alignment **G** at the edge of the holder passing the FFC wire to make Alignment **H**.
(Or, fold it in 90 degrees on the line connecting the Alignment **H** and Alignment **H'** at 33mm from **H**.)
(2)Fold it in 90 degrees at Alignment **I** at 135mm from the Alignment **H'** to make Alignment **J**.

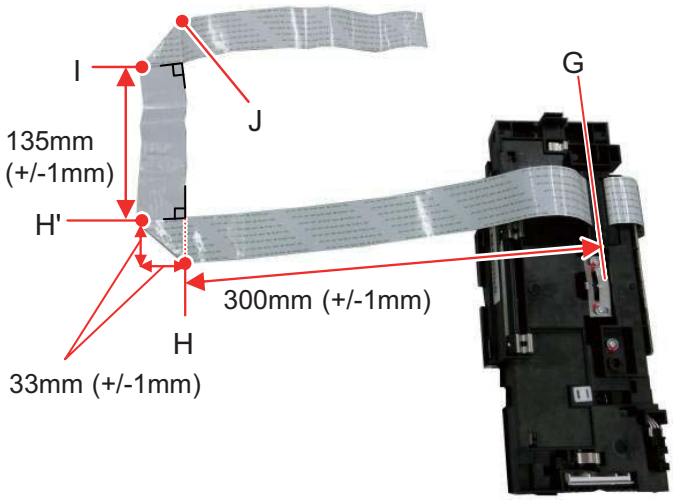

(3)Fold the FFC wire in 180 degrees at the Alignment **J**.
(The reference length from the Alignment **J** to the wire's edge is about 195mm.)
(4)Unfold the FFC wire to easily pass the FFC wire through the ferrite core at the next step.

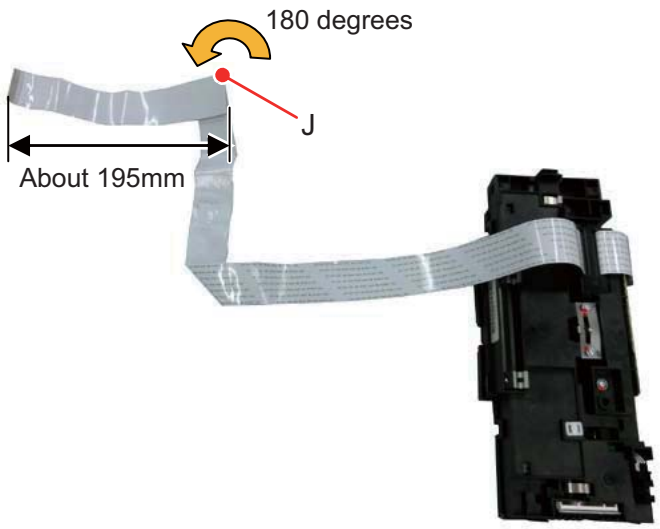

Figure 1-5-119

58. Pass the ISU's FFC wire through the ferrite core affixed on the scanner frame and then pass its edge through the aperture in the center of the scanner frame.

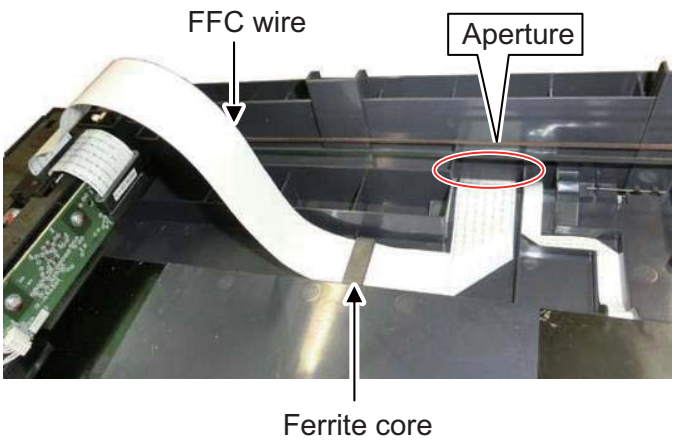

Figure 1-5-120

59. Fit the ISU drive belt to the groove at the ISU bottom side.
    Confirm the teeth of the ISU drive belt face the machine front side before fitting as above.
    After fitting, confirm the ISU drive belt and the ISU are connected by horizontally shifting the ISU (in the red arrow's direction in the figure).

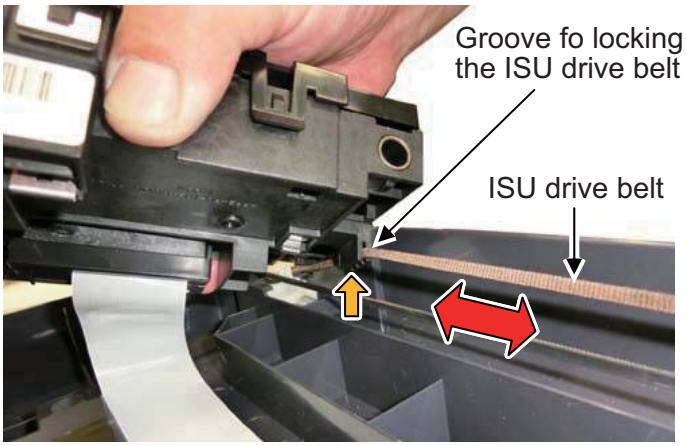

Figure 1-5-121

60. Pass the shaft removed at Step 54 through the holes (**K**, **L**) of the scanner frame's machine left side and the ISU's machine rear side, and then fit the groove of the shaft to the locking hole of the scanner frame's machine right side.

*: After that, confirm the edge of the ground spring is fitted to the groove (**F**) of the shaft.

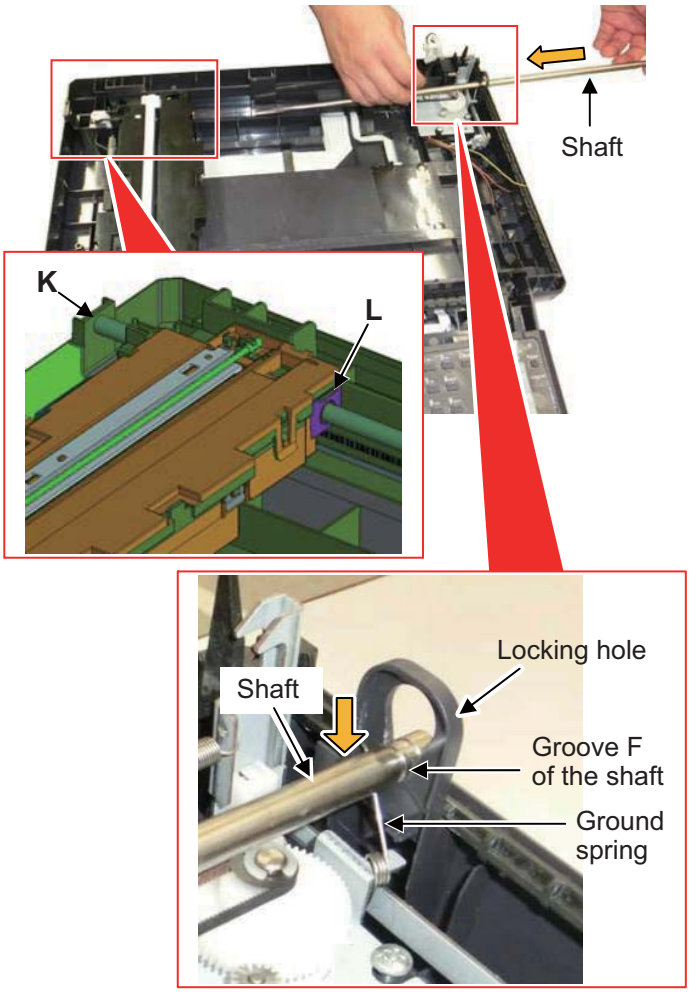

Figure 1-5-122

61. Confirm the conductivity between the ground spring M and the machine right side's edge of the shaft.
(Electric resistance: 10Ω or less)

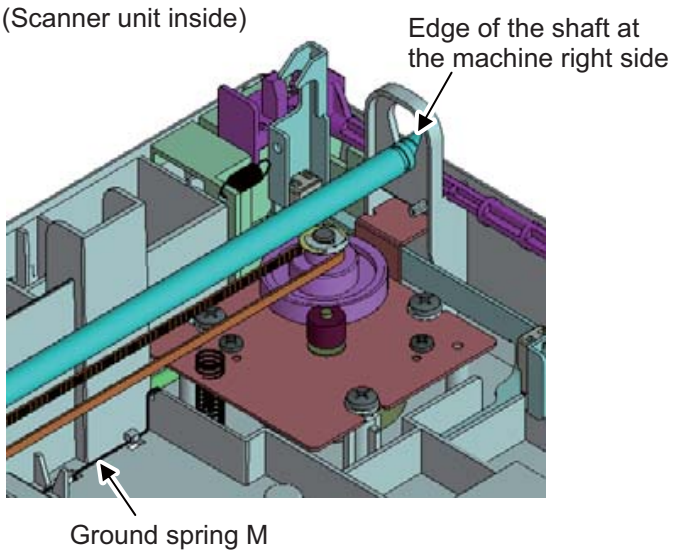

62. Affix two double-sided tapes bundled in the ISU for service while aligning their edges to the engravings on the scanner frame.
63. Affix the ISU side's folding part of the FFC wire to the double-sided tapes.

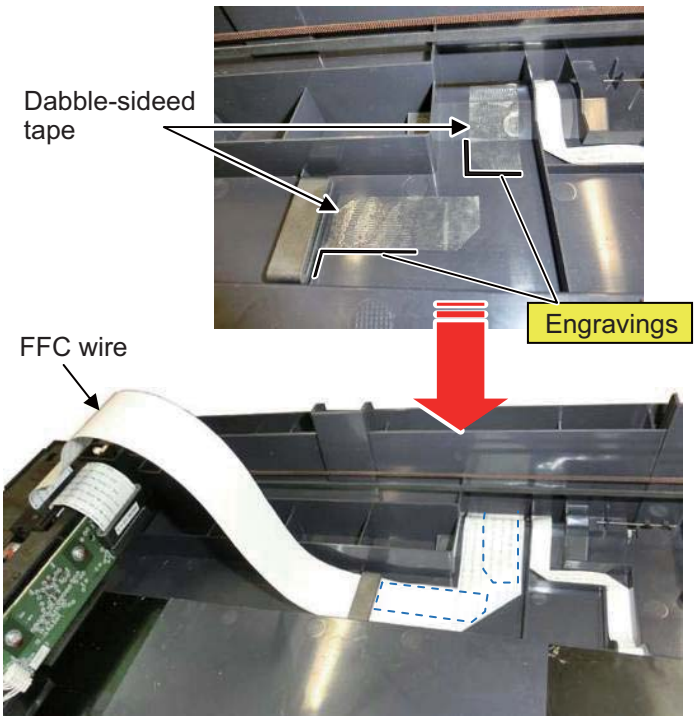

64. Refit the ISU cover and the operation cover in the reverse procedures of removal.

Figure 1-5-123

(Align the FFC wire at the main PWB side.)

65. Remove the left and right holders of the scanner unit at Step 20, 21 and fully open the scanner unit.

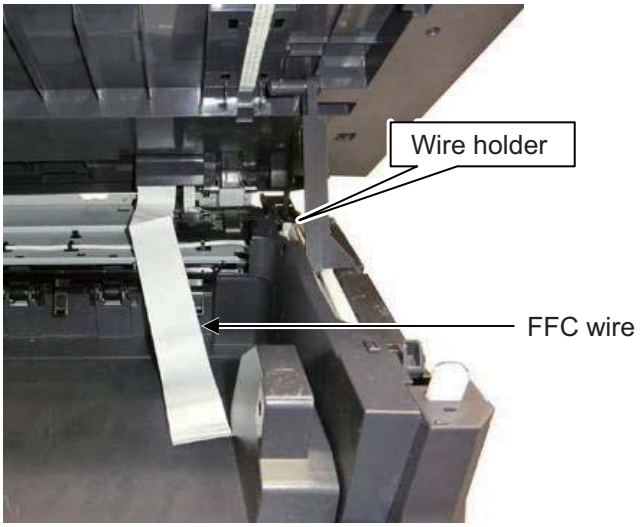

Figure 1-5-124

66. Align the FFC wire like the figure to the right.
(Seven alignment ribs and one ferrite core)

(Wire holder viewed from the machine right side)

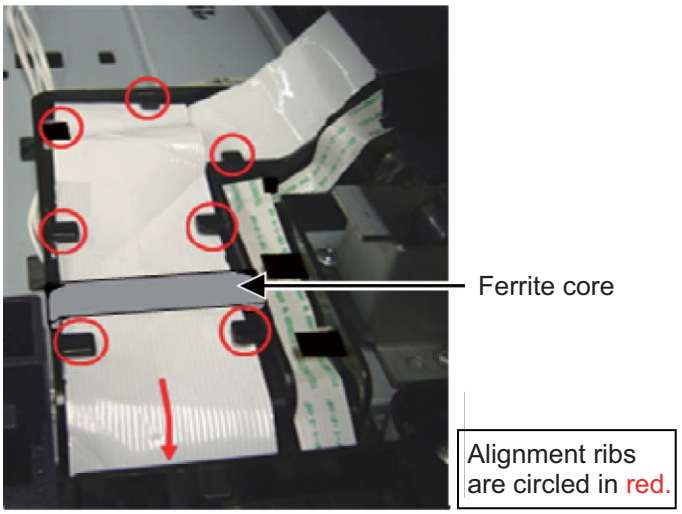

Figure 1-5-125

67. Insert the end of the FFC wire into the connector YC8 on the main PWB.

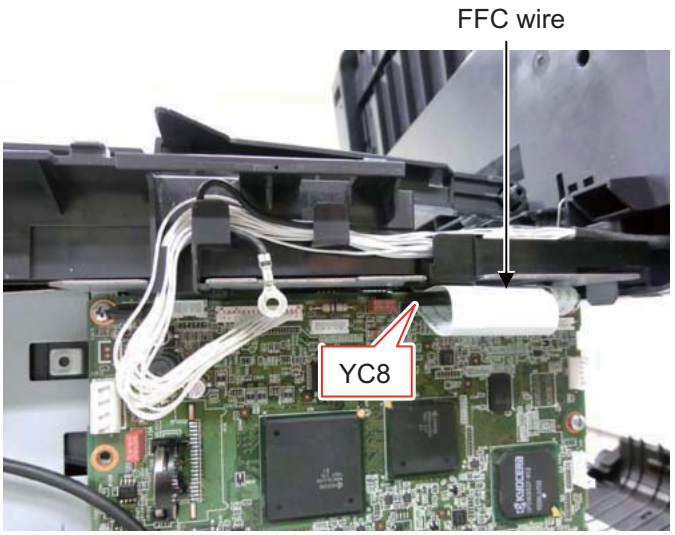

Figure 1-5-126

68. Refit all the parts and the unit detached in the reverse manner of the above procedures.

1-5-11 Document processor

(1) Detaching and refitting the document processor

Procedure

1. Remove the rear upper cover, right upper cover, left upper cover and front cover (see page 1-5-3).
2. Remove left and right pins and then close the inner tray.

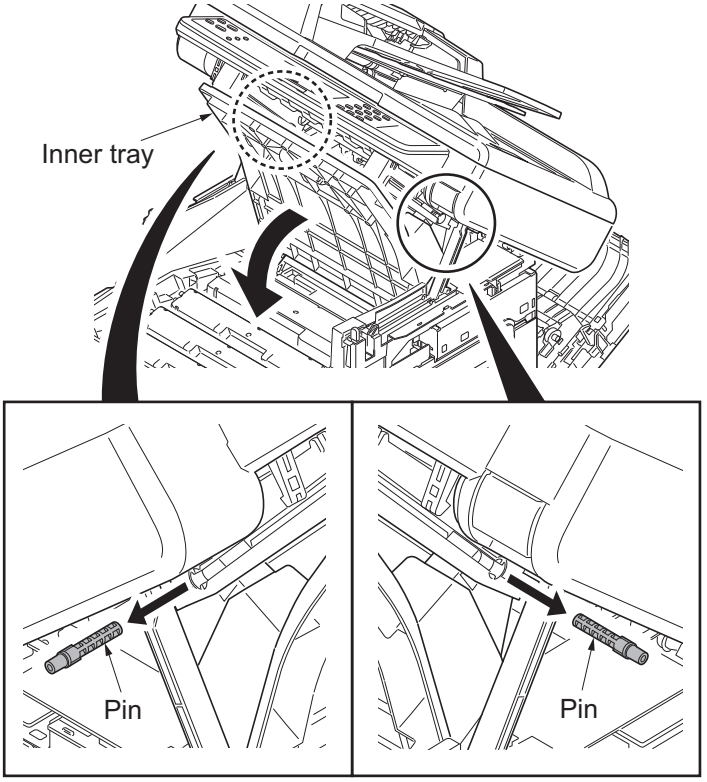

Figure 1-5-127

3. Release three hooks and then remove the upper middle cover.

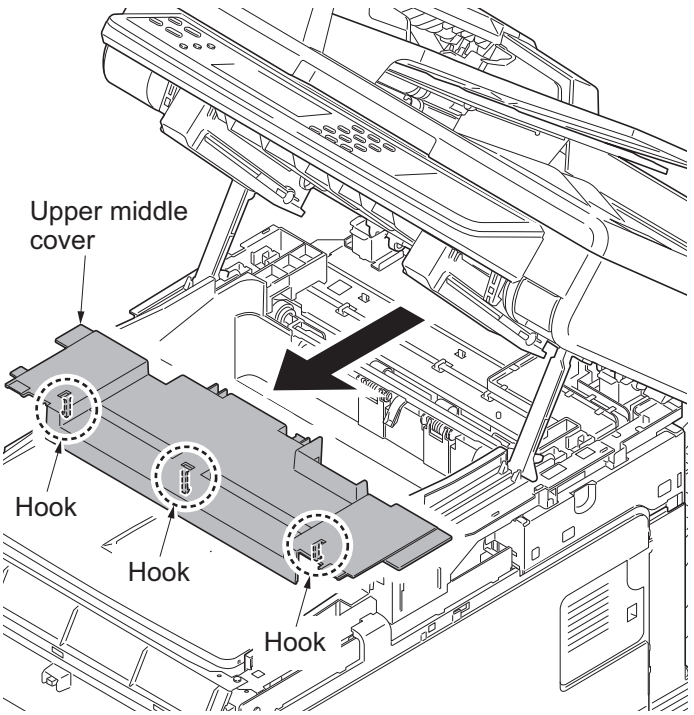

Figure 1-5-128

4. Remove the right rear cover, right cover and right lower cover (see page 1-5-6).
5. Remove the controller shield (see page 1-5-30).
6. Remove connector (YC32) from main PWB.

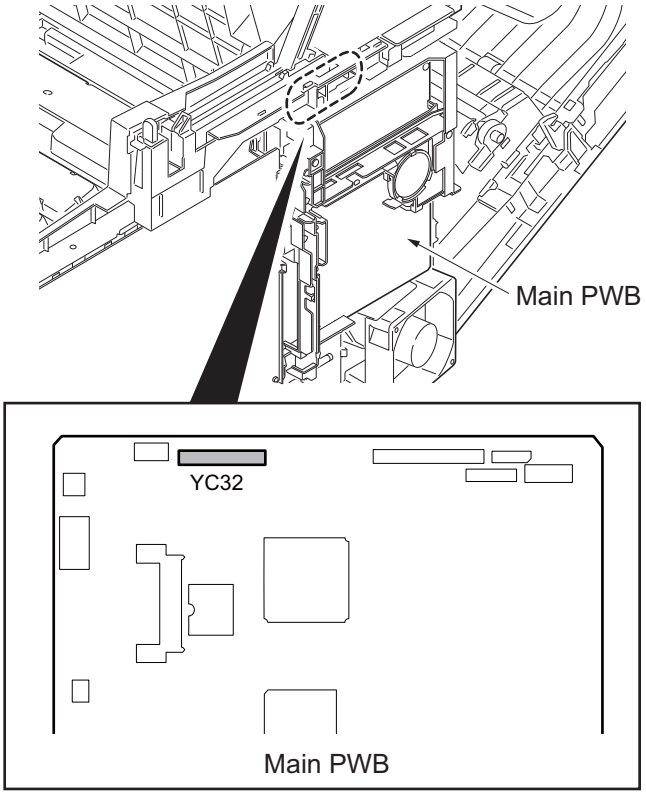

Figure 1-5-129

7. Cut the band and then remove the it.
8. Remove the DP wire and ground wire from wire holder.
9. Close the scanner unit.

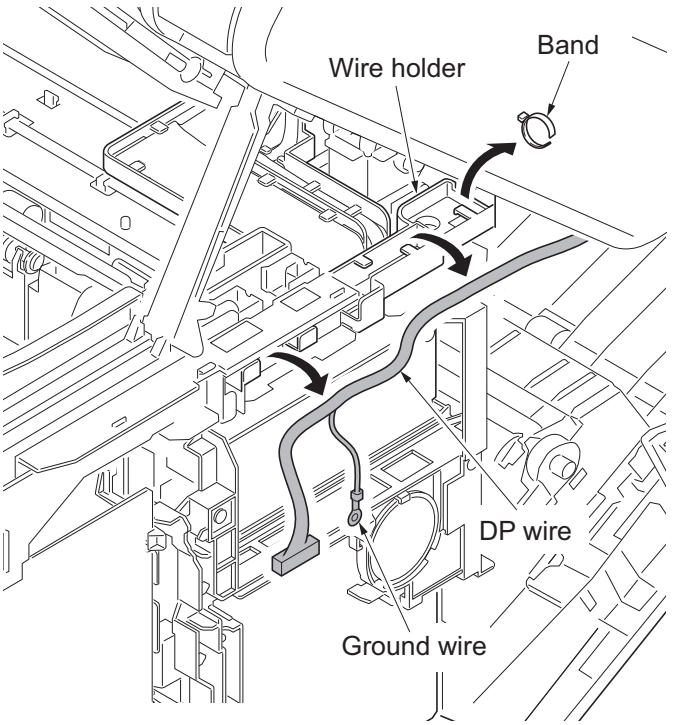

Figure 1-5-130

10. Press the DP lock lever through the hole at the bottom right side of the scanner unit, and open the document processor.

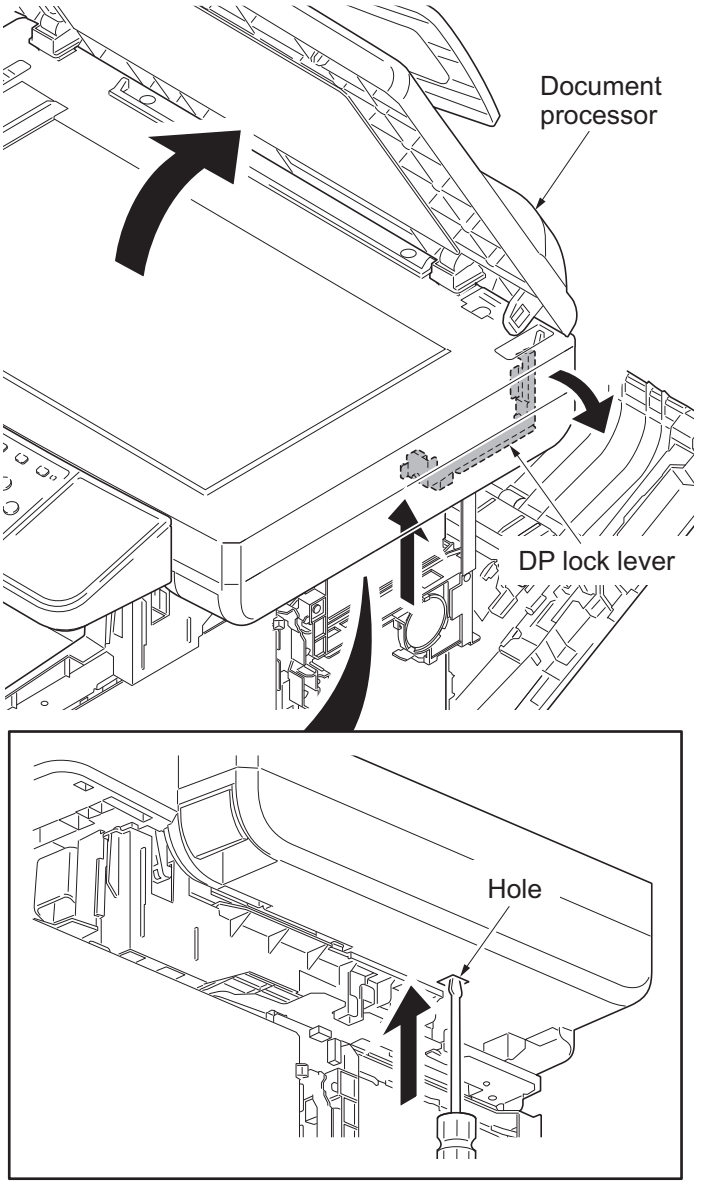

Figure 1-5-131

11. Remove the wire cover.

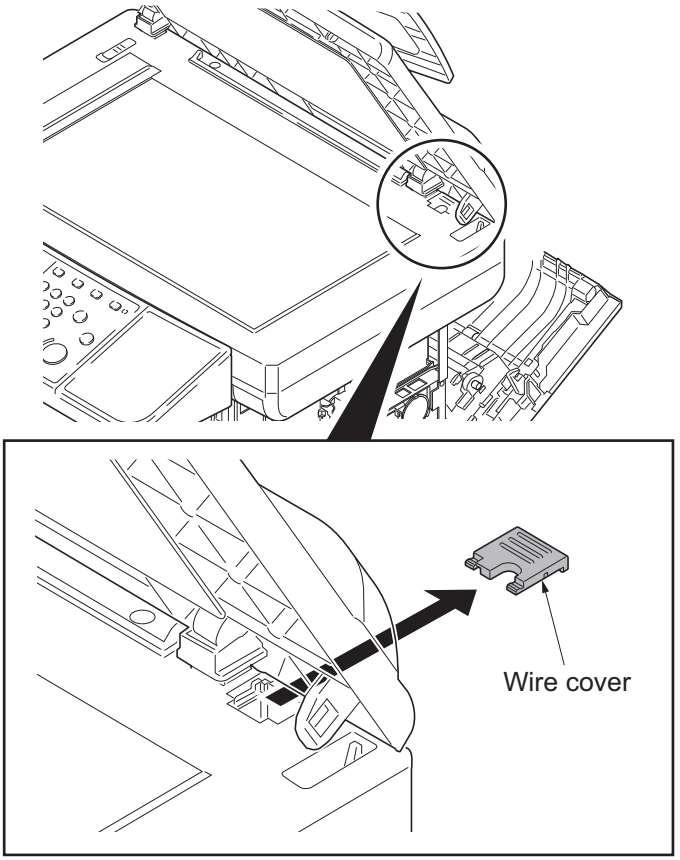

Figure 1-5-132

12. Remove the document processor.

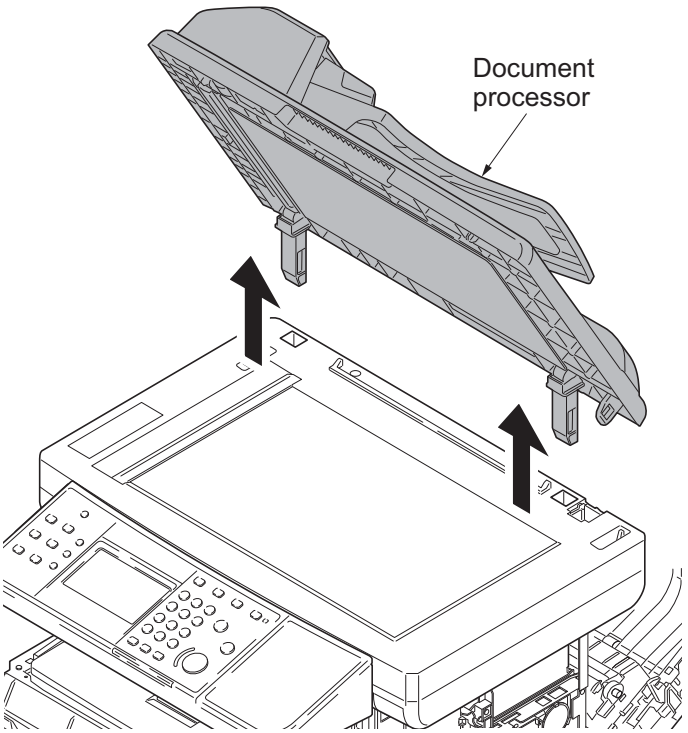

Figure 1-5-133

(2) Detaching and refitting the DP paper feed pulley unit

Procedure

1. Open the DP top cover.
2. Remove the screw.
3. Release three hooks and then remove the DP rear cover.

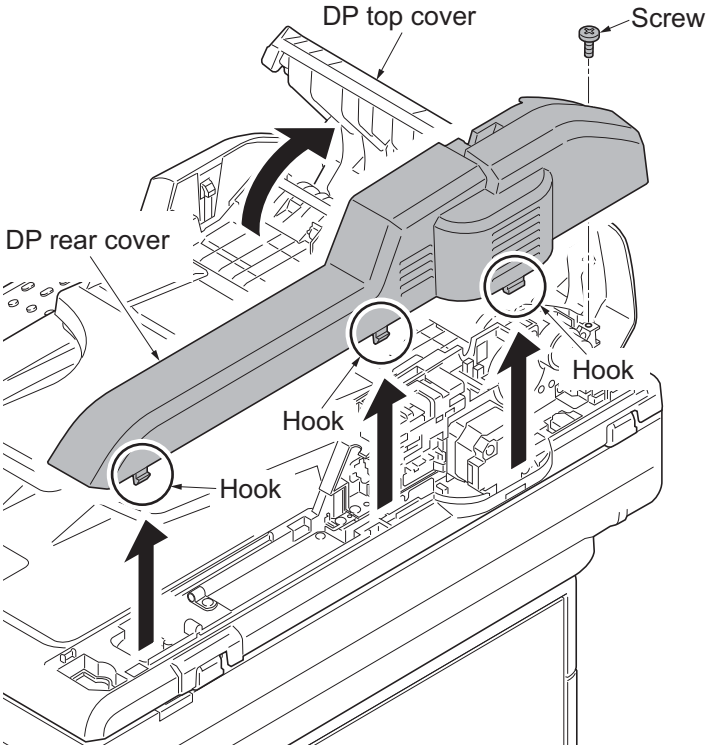

Figure 1-5-134

4. Release two hooks and then remove the DP front cover.

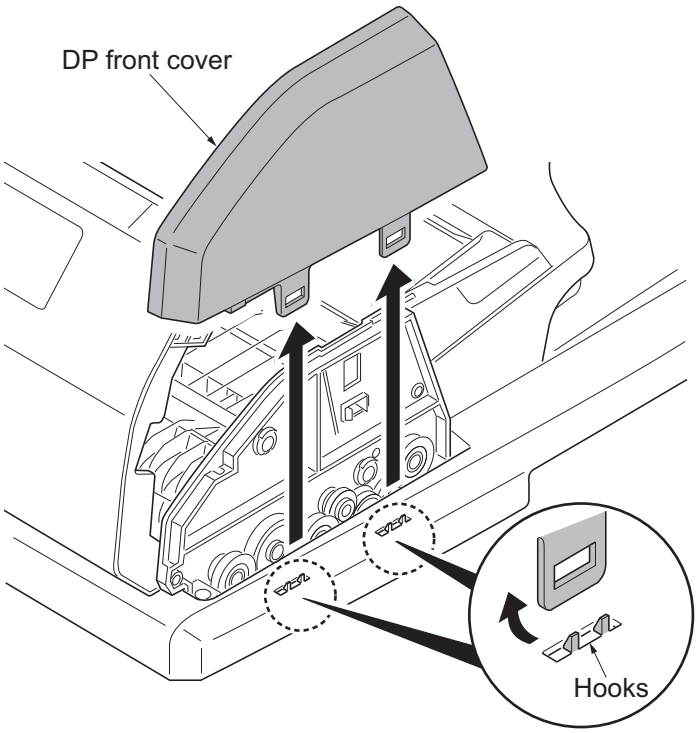

Figure 1-5-135

5. Remove the stop ring and bush.

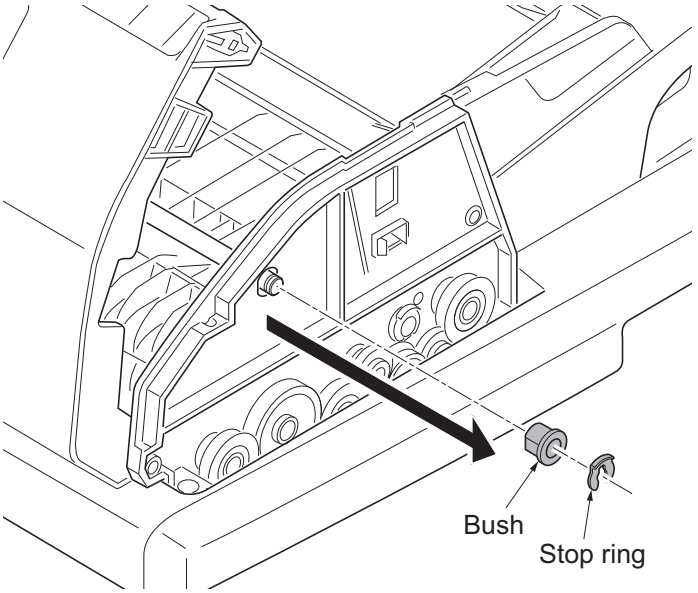

Figure 1-5-136

6. Remove the stop ring A and then remove the DP paper feed clutch from the PF shaft.
7. Remove the stop ring B and then remove the PF collar, spring, spring collar, pin and bush from the PF shaft.

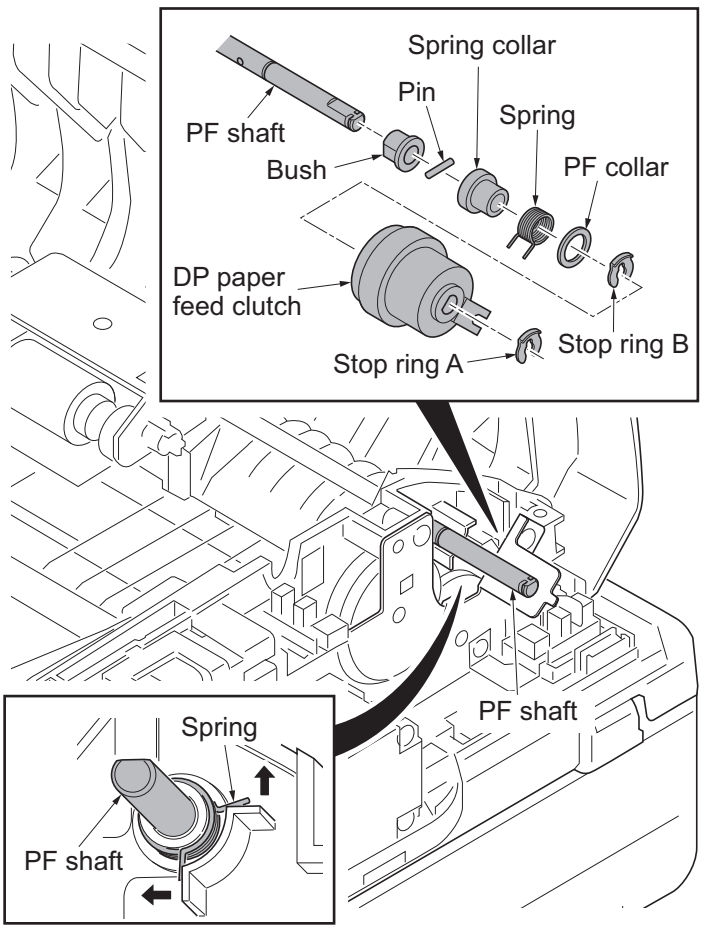

Figure 1-5-137

8. Remove the DP forwarding pulley unit.

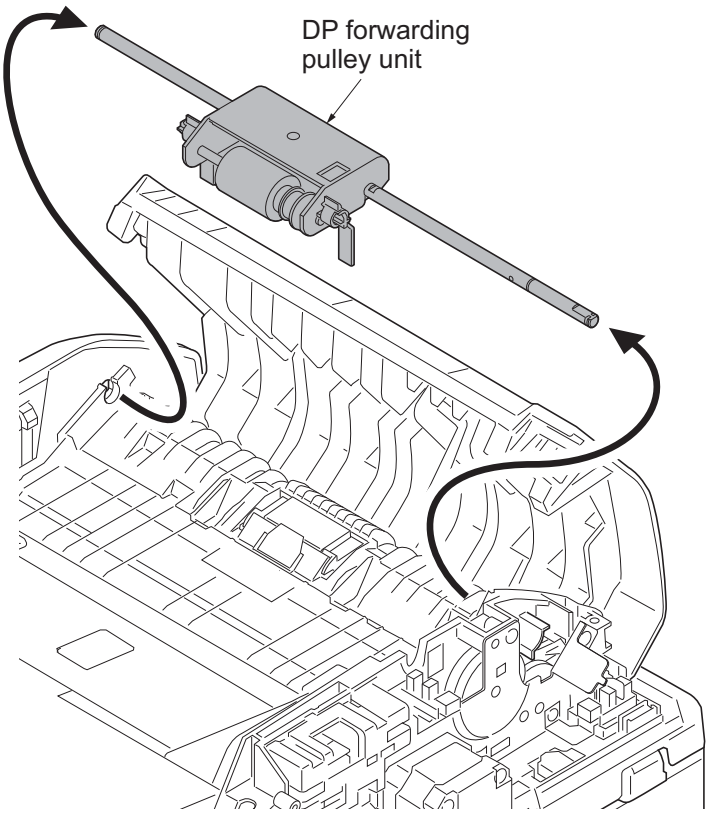

Figure 1-5-138

9. Remove the stop ring A.
10. Remove the DP feed pulley unit from the LF holder.
11. Remove the stop ring B.
12. Remove the PF collar, spring, spring collar and pin from the PF shaft.
13. Remove the DP feed pulley, one-way clutch, PF pulley gear and pin from the PF shaft.

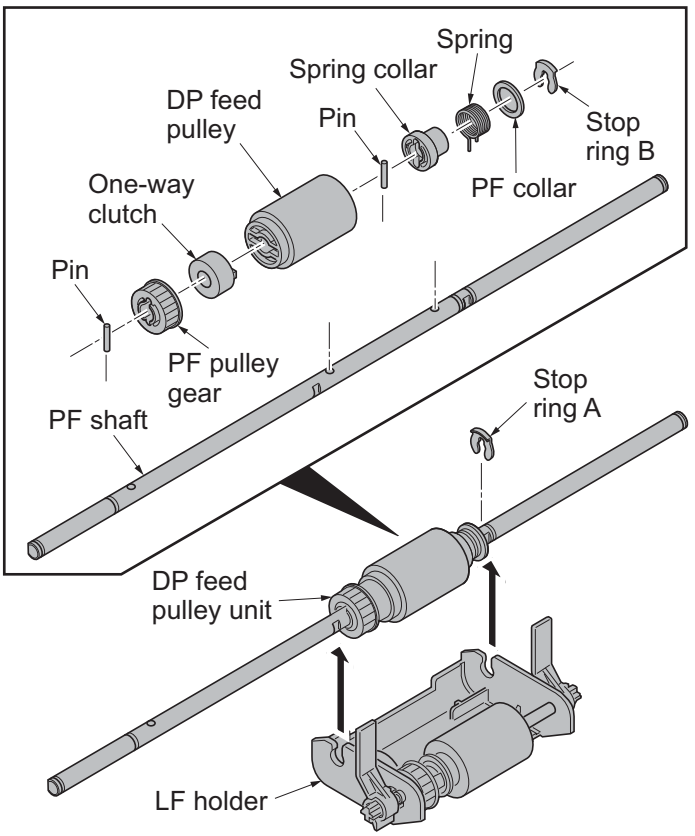

Figure 1-5-139

14. Remove the PF stopper from the LF holder.
15. Remove the stop ring.
16. Pull out the LF shaft and then remove the LF gear 18, joint gear and DP forwarding pulley.
17. Check or replace the DP feed pulley and DP forwarding pulley, and refit all the removed parts.

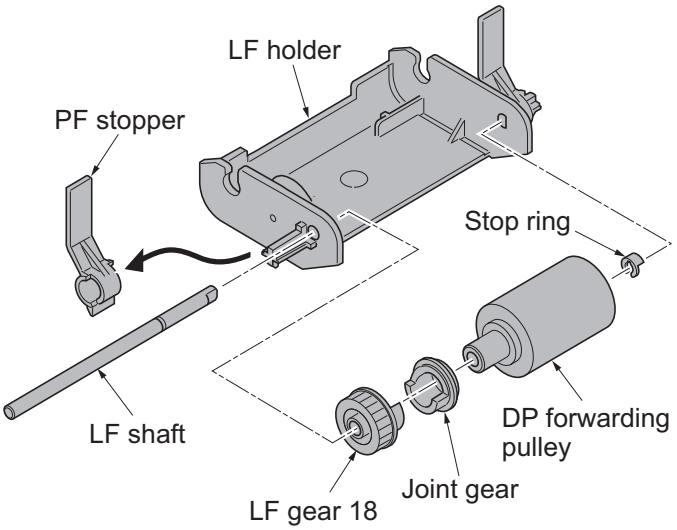

Figure 1-5-140

(3) Detaching and refitting the DP separation pad

Procedure

1. Remove the DP paper feed pulley unit (see page 1-5-82).
2. Remove the DP separation pad.
3. Check or replace the DP separation pad and refit all the removed parts.

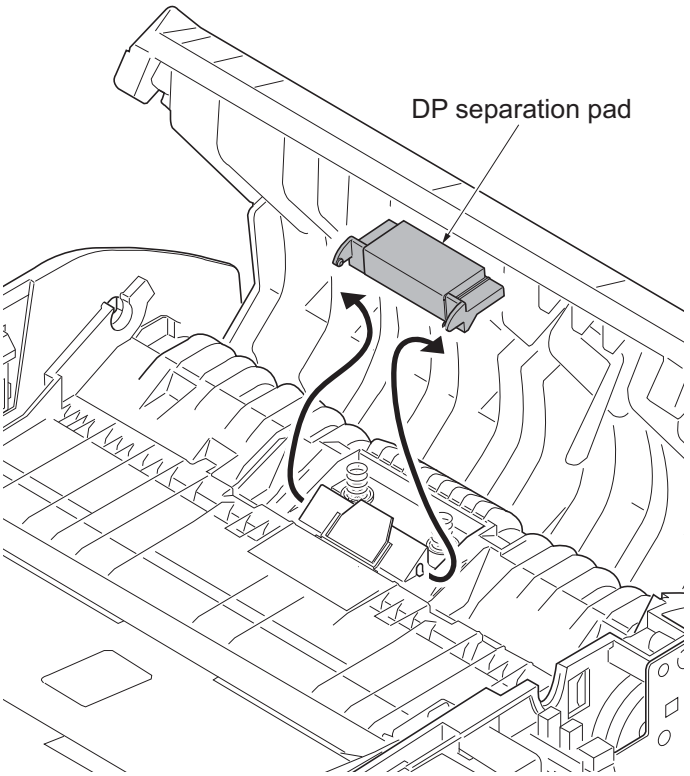

Figure 1-5-141

(4) Detaching and refitting the DP drive PWB

Procedure

1. Remove the DP rear cover (see page 1-5-82).
2. Remove all connectors from DP drive PWB.
3. Remove the screw and then remove the DP drive PWB.
4. Check or replace the DP drive PWB and refit all the removed parts.

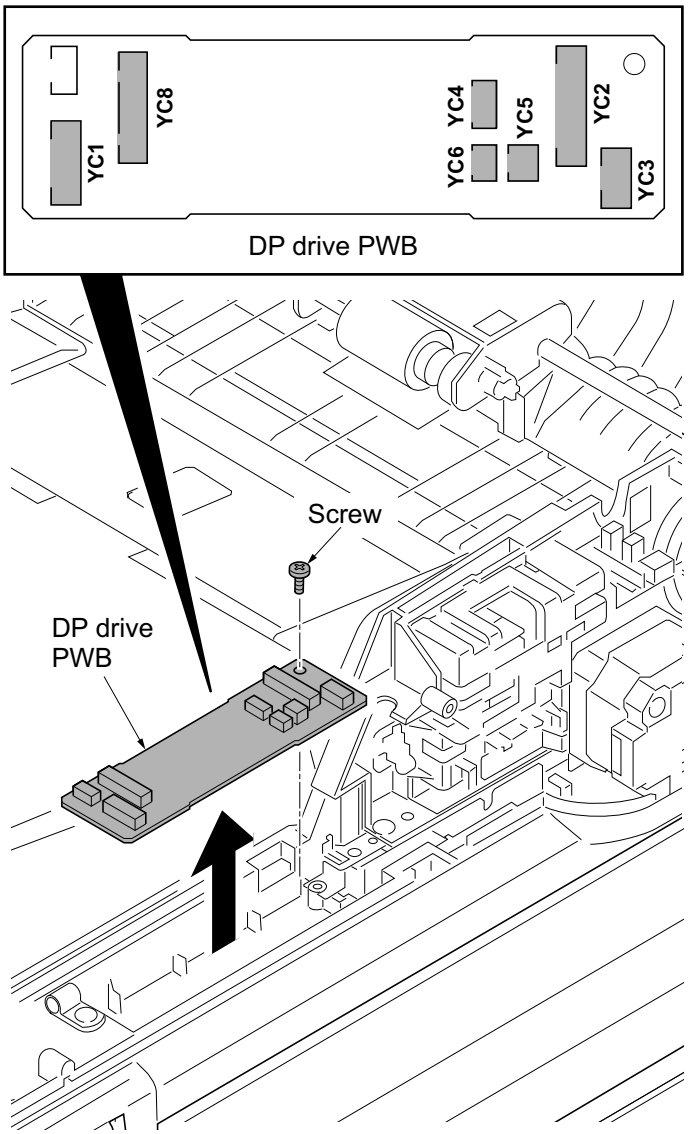

Figure 1-5-142

1-5-12 Others

(1) Detaching and refitting the paper conveying unit

Procedure

1. Open the rear cover.
2. Remove left and right straps.

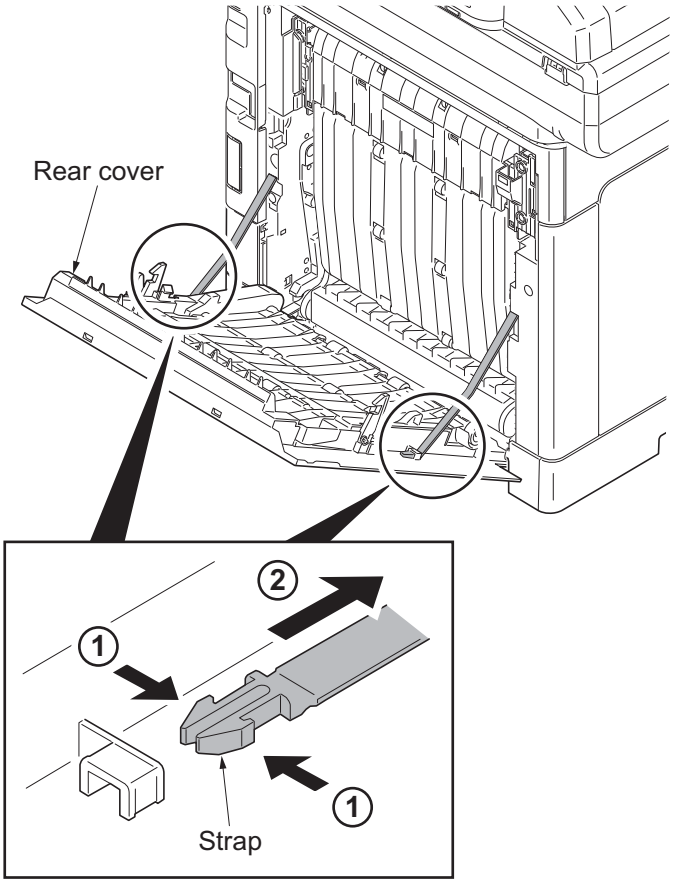

Figure 1-5-143

3. Remove the rear cover unit.

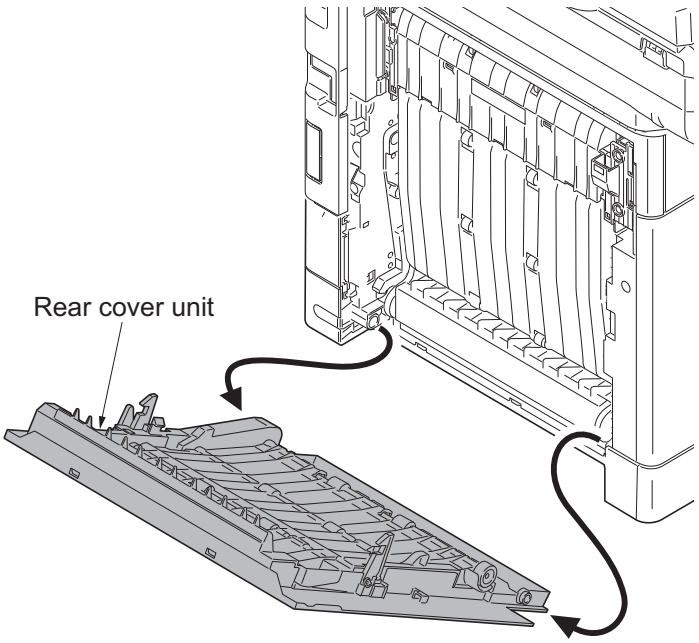

Figure 1-5-144

4. Remove the paper conveying unit.

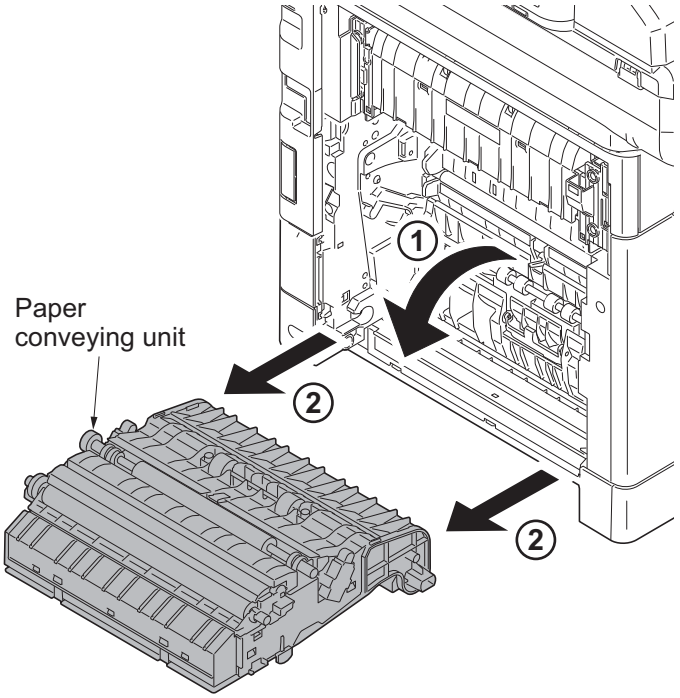

Figure 1-5-145

(2) Detaching and refitting the operation panel

Procedure

1. Remove the operation panel right cover by sliding forward.

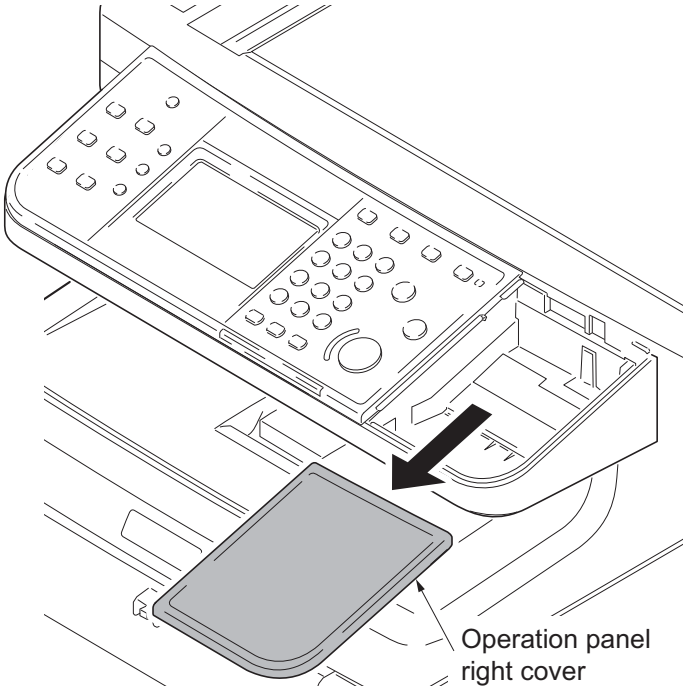

Figure 1-5-146

2. Release three hooks and then remove the operation panel.
3. Remove three connectors.
4. Check or replace the operation panel and refit all the removed parts.

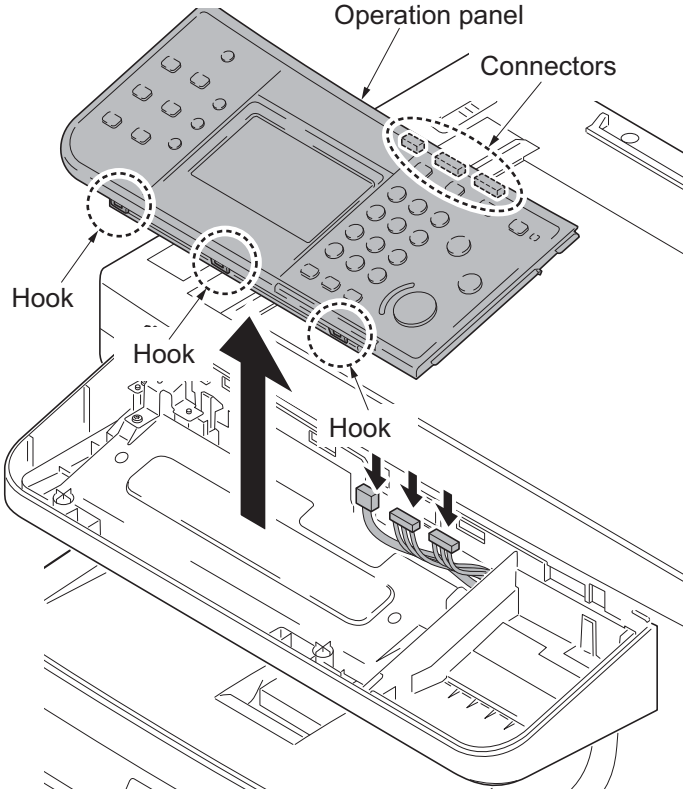

Figure 1-5-147

(3) Detaching and refitting the power source inlet

Procedure

1. Remove the power source PWB (see page 1-5-29).
2. Remove the connector and release the hook and then remove the right fan motor.

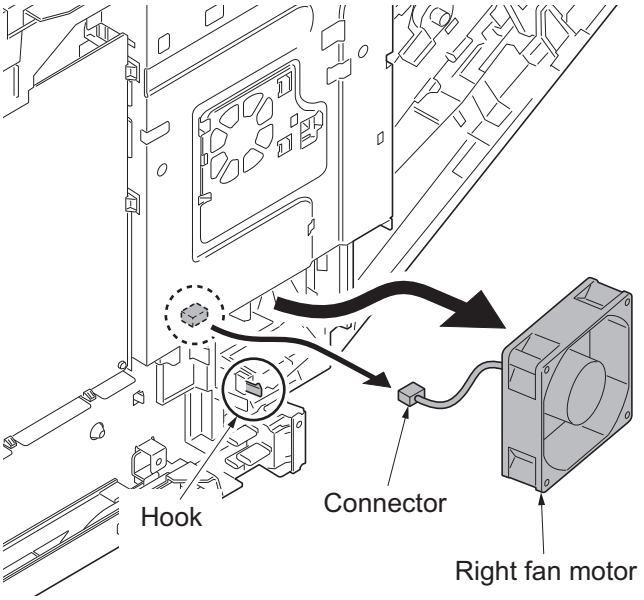

Figure 1-5-148

3. Remove the screw of the grounding wire.

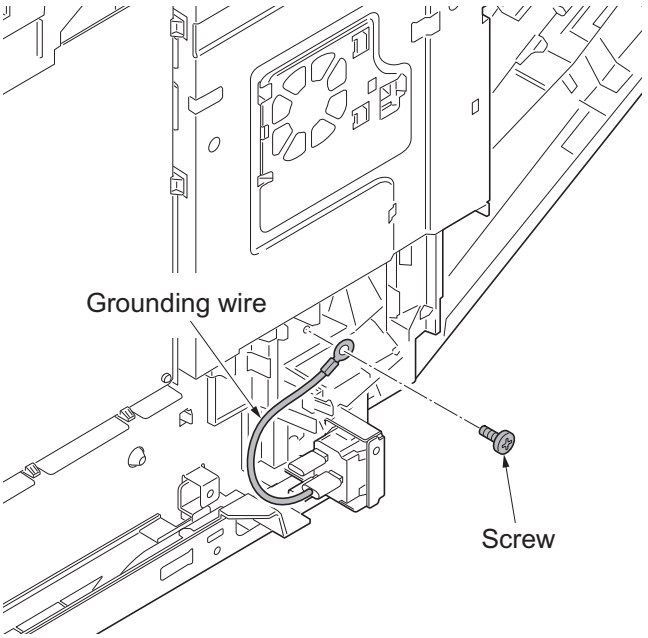

Figure 1-5-149

4. Remove the screw and two terminals and then remove the power source inlet.

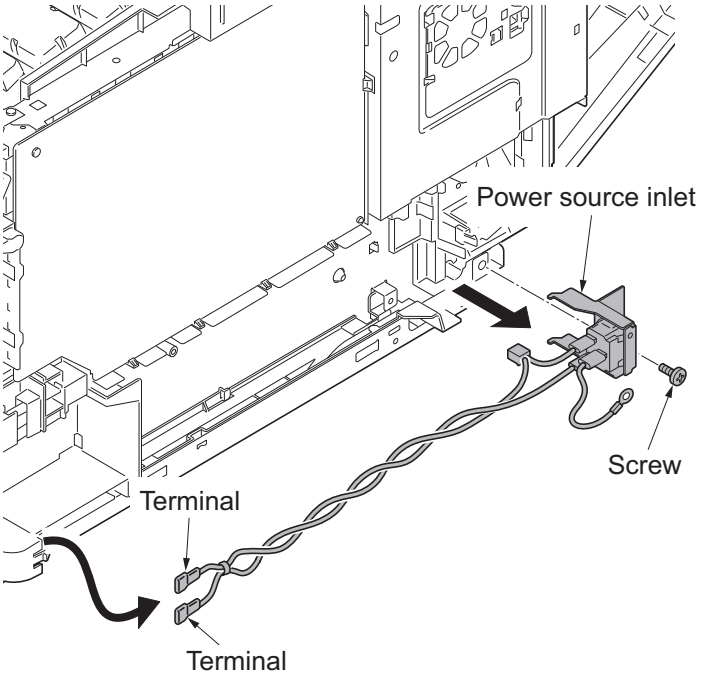

Figure 1-5-150

5. Check or replace the power source inlet and refit all the removed parts.

*: Before mounting the AC inlet on the main unit, twist the wires 5 to 7 turns.

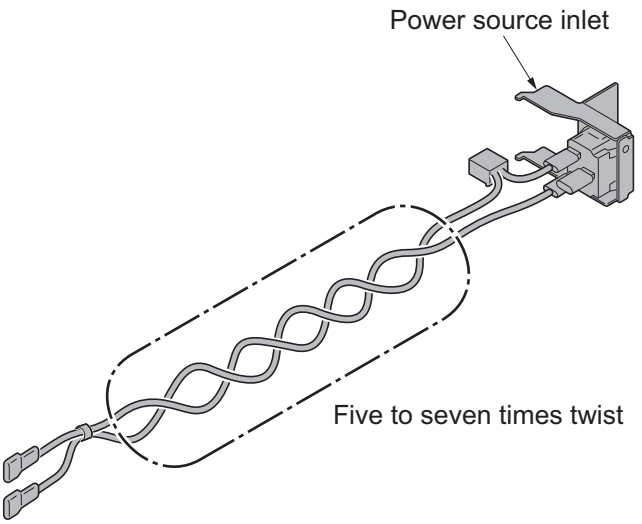

Figure 1-5-151

(4) Direction of installing the principal fan motors

When detaching or refitting the fan motors, be careful of the airflow direction (intake or exhaust).

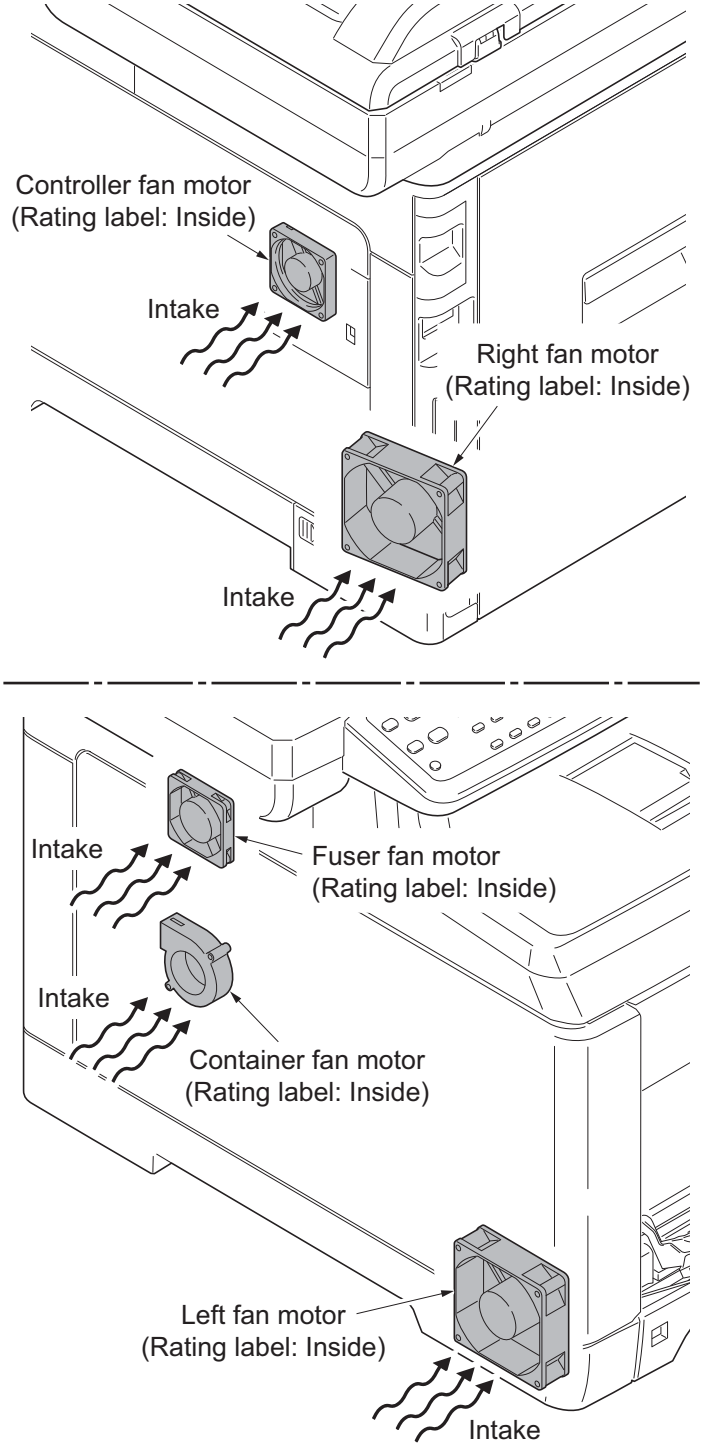

Figure 1-5-152

This page is intentionally left blank.

1-6-1 Upgrading the firmware

Follow the procedure below to upgrade the firmware of main PWB (main controller and scanner), engine PWB, FAX control PWB*, optional language, optional paper feeder and color table.

Preparation

Extract the file that has the download firmware and put them in the USB Memory.

Procedure

1. Turn ON the main power switch and confirm if the screen shows “Ready to copy” then, turn OFF the main power switch.
2. Insert USB memory that has the firmware in the USB memory slot.
3. Turn ON the main power switch.
4. About 40 seconds later, “FW-Update” will be displayed and blinking the memory indicator (this shows to start the download).
5. Display the software that now upgrading.

   “FW-Update [CTRL]”
   “FW-Update [ENGN]”
   “FW-Update [PF1]”
   “FW-Update [PF2]”
   “FW-Update [SCAN]”
   “FW-Update [FAX]” *
   “FW-Update [OPT]”
   “FW-Update [CLT]”

Caution:

Never turn off the power switch or remove the USB flash device during upgrading.

6. Display the completion of the upgrade (Memory indicator is ON condition).
7. ROM version is confirmed by the content of the display.
8. Turn OFF the main power switch and remove the USB memory.

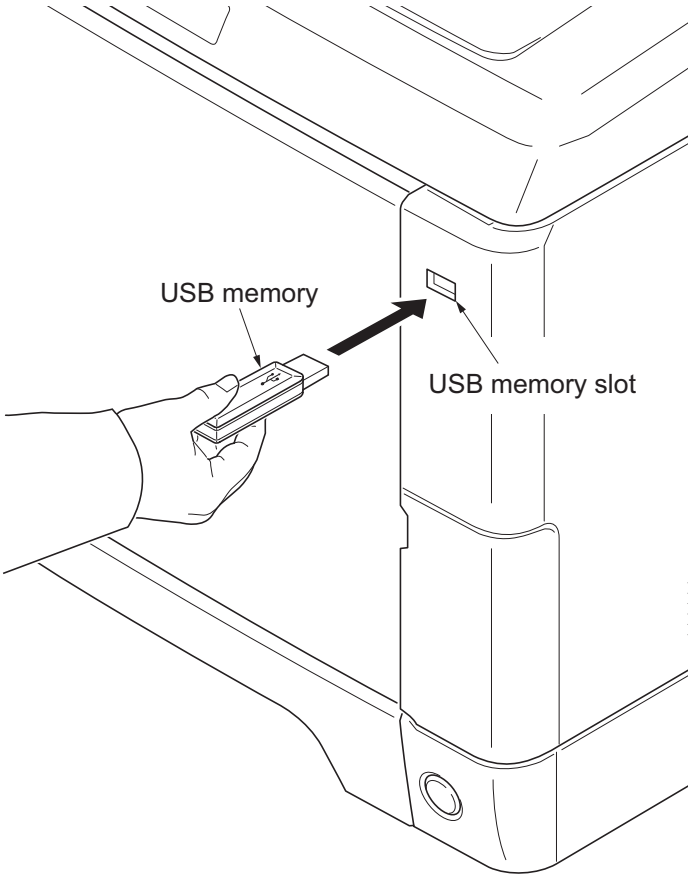

Figure 1-6-1

*: 4 in 1 model (with FAX) only.

Safe-UPDATE

If the device is accidentally switched off or the USB memory is disconnected and upgrading was incomplete, upgrading is retried when turning the main power switch on next time. Insert USB memory and turn the main power switch on to perform steps 3 to 8 as the above.

Emergency-UPDATE

If Safe-UPDATE is not successful in upgrading, the message below appears.
In that case, retry upgrading after recovering the software by following the procedure below.

```
FW-Update
      Error   FFFF
```

Preparation

The USB memory must be formatted in FAT or FAT32 in advance.
Extract the main firmware to download from the file.
Rename the file which was extracted from the archive. [DL_CTRL.2PY] to [KM_EMRG.2PY]
Copy the all extracted files to the root of the USB memory.

Procedure

1. Turn the main power switch off.
2. Insert the USB memory which contains the firmware into the USB memory slot.
3. Turn the main power switch on.
4. Rewriting of the PWB software will start for restoration.
   “Emergency Update” is displayed on the LCD of the operation panel.
5. "Completed" will be displayed when rewriting is successful.
   * : "Failed" will be displayed when rewriting is failed.
6. Turn the main power switch off.
7. Wait for several seconds and then remove the USB memory from the USB memory slot.
8. Extract the firmware to download from the archive and copy to the root of the formatted USB memory.

   NOTE: Deletes the "ES_SKIP.on" file When it is contained directly under the USB memory.

9. Insert the USB memory in which the firmware was copied in the USB memory slot.
10. Perform steps 3 to 8 on the previous page.
11. Turn the main power switch on.
12. Perform maintenance item U000 (Print a maintenance report) to check that the version of ROM U019 has been upgraded.

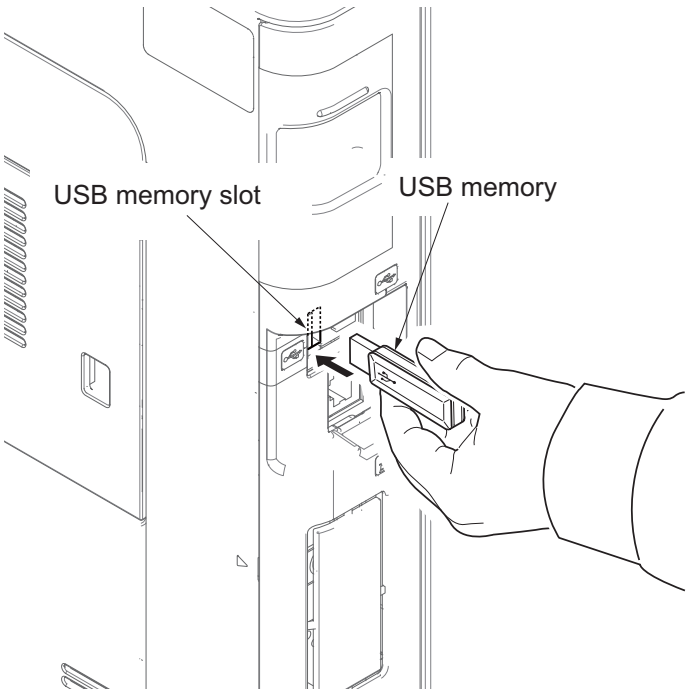

Figure 1-6-2

1-6-2 Remarks on engine PWB replacement

When replacing the engine PWB, remove the EEPROM (U1) from the engine PWB that has been removed and then reattach it to the new engine PWB.

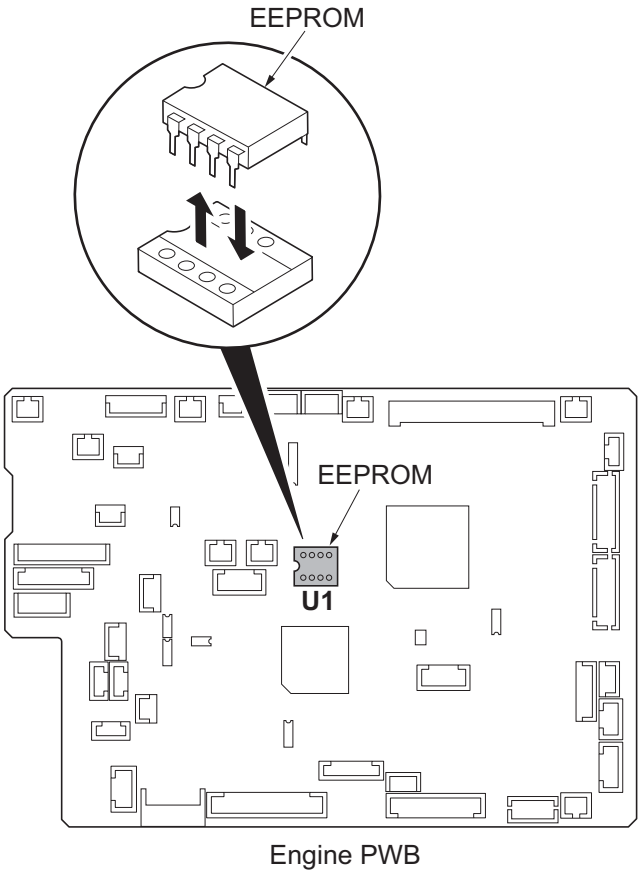

Figure 1-6-3

2-1-1 Paper feed/conveying section

Paper feed/conveying section consists of the paper feed unit that feeds paper from the cassette and the MP tray paper feed unit that feeds paper from the MP tray, and the paper conveying section that conveys the fed paper to the transfer/separation section.

(1) Cassette paper feed section

The cassette can contain 250 sheets. The sheet from the cassette is pulled out by rotation of the pickup roller and sent to the paper conveying section by rotation of the paper feed roller. Also the retard roller prevents multiple feeding of paper.

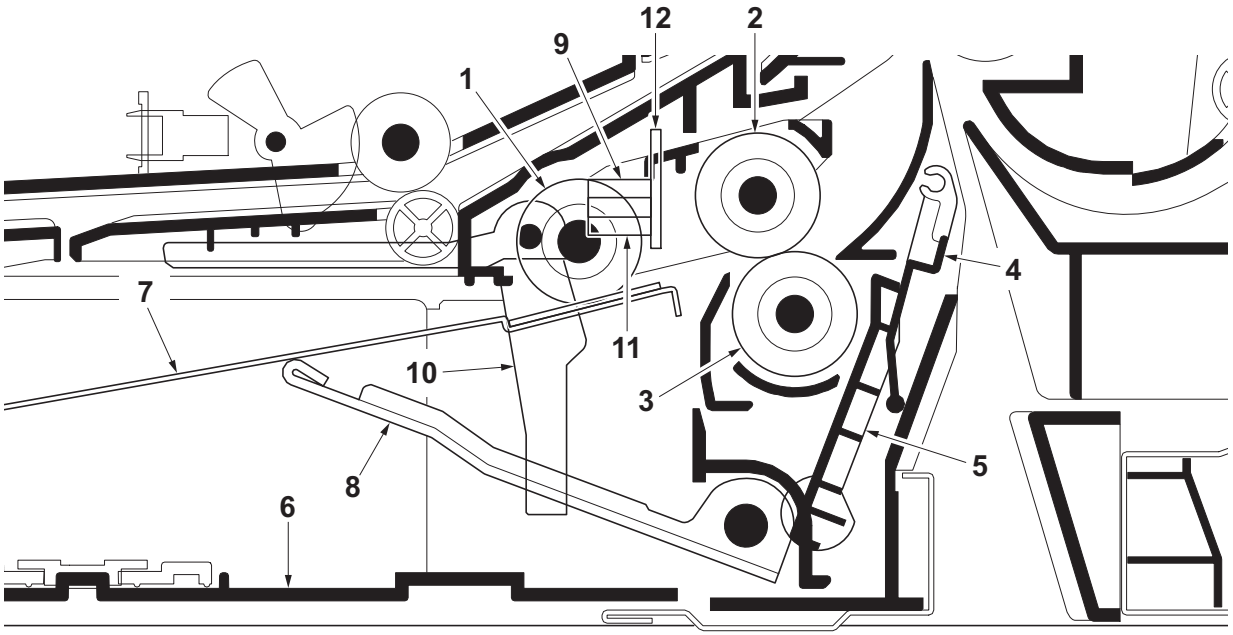

Figure 2-1-1 Cassette paper feed section

1. Pickup roller
2. Paper feed roller
3. Retard roller
4. Retard cover
5. Retard lever
6. Cassette base
7. Bottom plate
8. Lift work plate
9. Paper sensor (PS)
10. Actuator (paper sensor)
11. Lift sensor (LS)
12. Cassette PWB (CPWB)

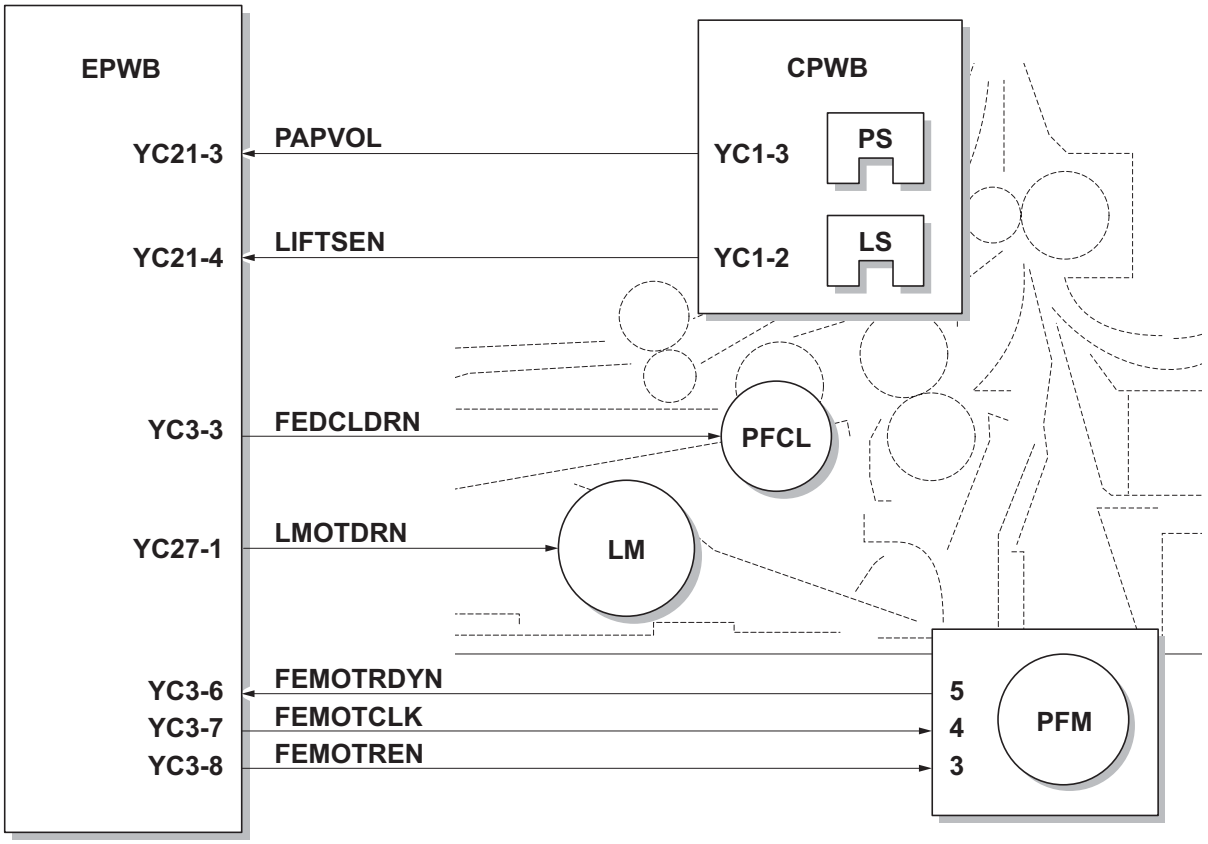

Figure 2-1-2 Cassette paper feed section block diagram

(2) MP tray paper feed section

The MP tray can contain 50 sheets. Feeding from the MP tray is performed by the rotation of the MP paper feed roller. Also, function of the MPF separation pad prevents paper from multiple feeding.

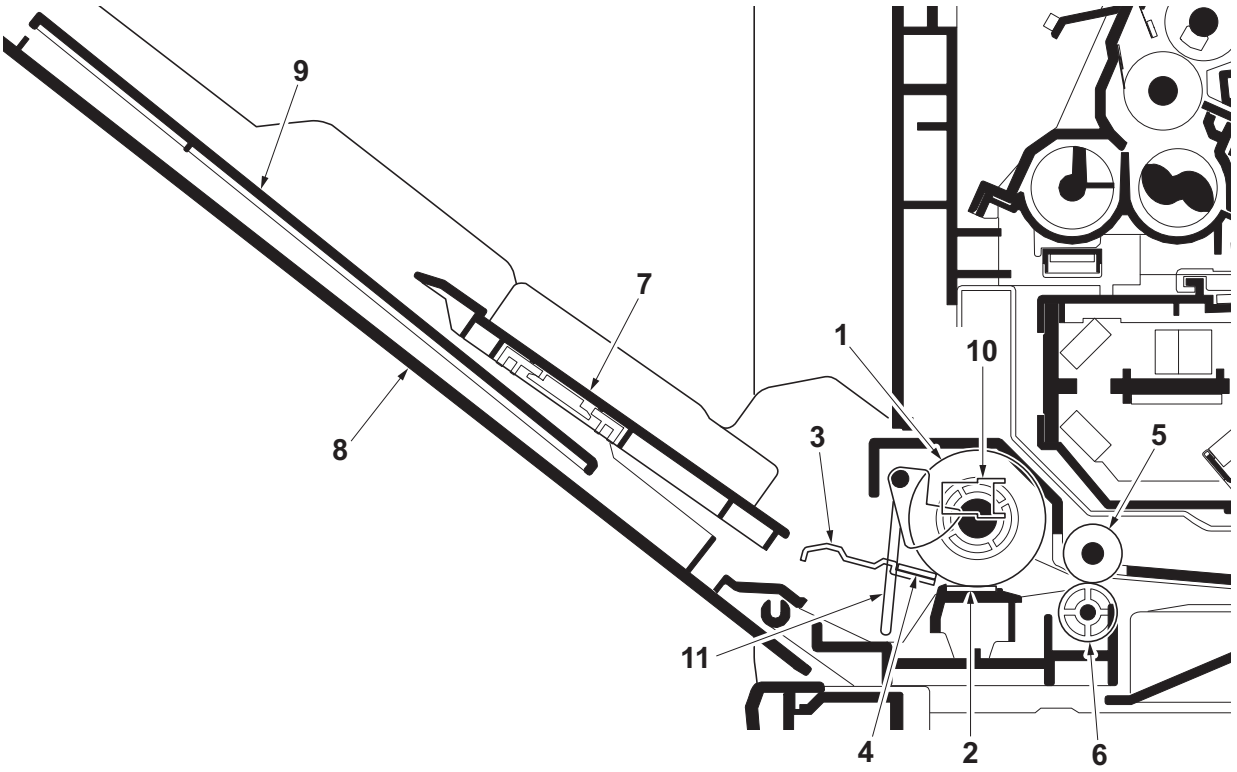

Figure 2-1-3 MP tray paper feed section

1. MP paper feed roller
2. MPF separation pad
3. MPF bottom plate
4. Friction pad
5. MPF feed roller
6. Feed pulley
7. MPF base
8. MPF cover
9. MPF tray
10. MP paper sensor (MPPS)
11. Actuator (MP paper sensor)

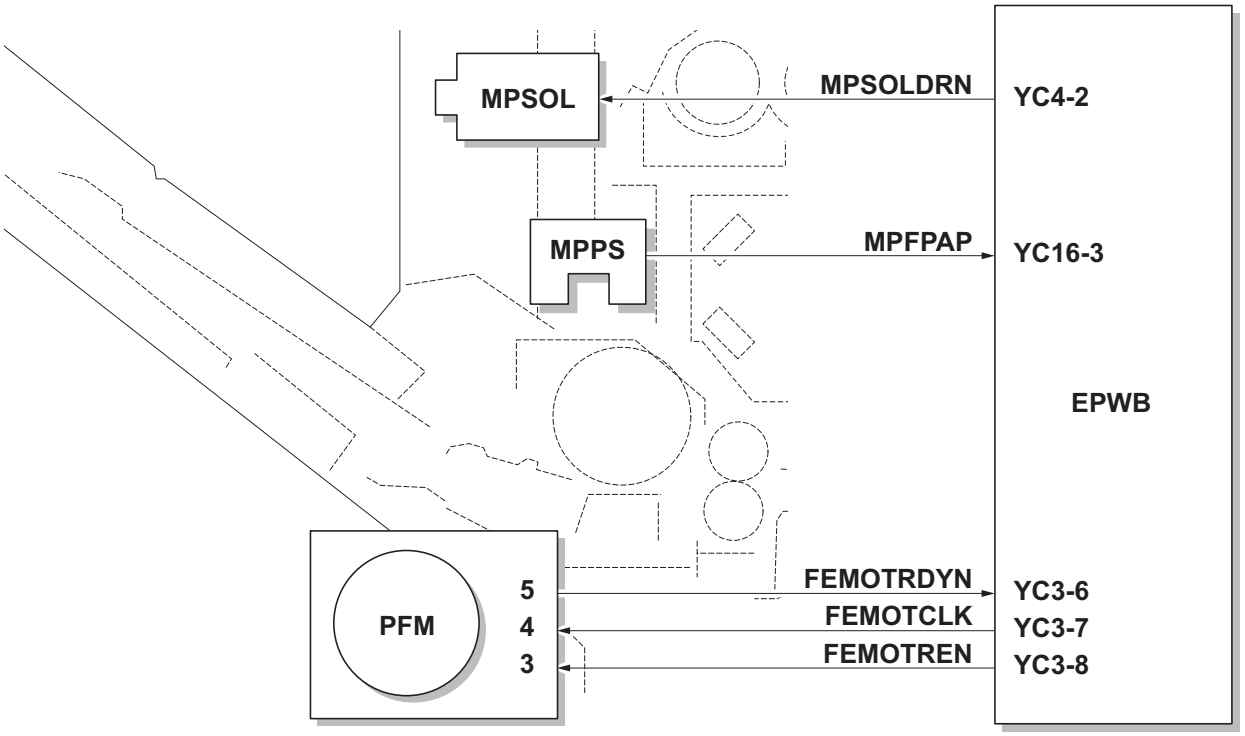

Figure 2-1-4 MP tray paper feed section block diagram

(3) Paper conveying section

The paper conveying section conveys paper to the transfer/separation section as paper feeding from the cassette or MP tray, or as paper refeeding for duplex printing. Paper by feeding is conveyed by the middle roller to the position where the registration sensor (RS) is turned on, and then sent to the transfer/separation section by the front registration roller and rear registration roller.

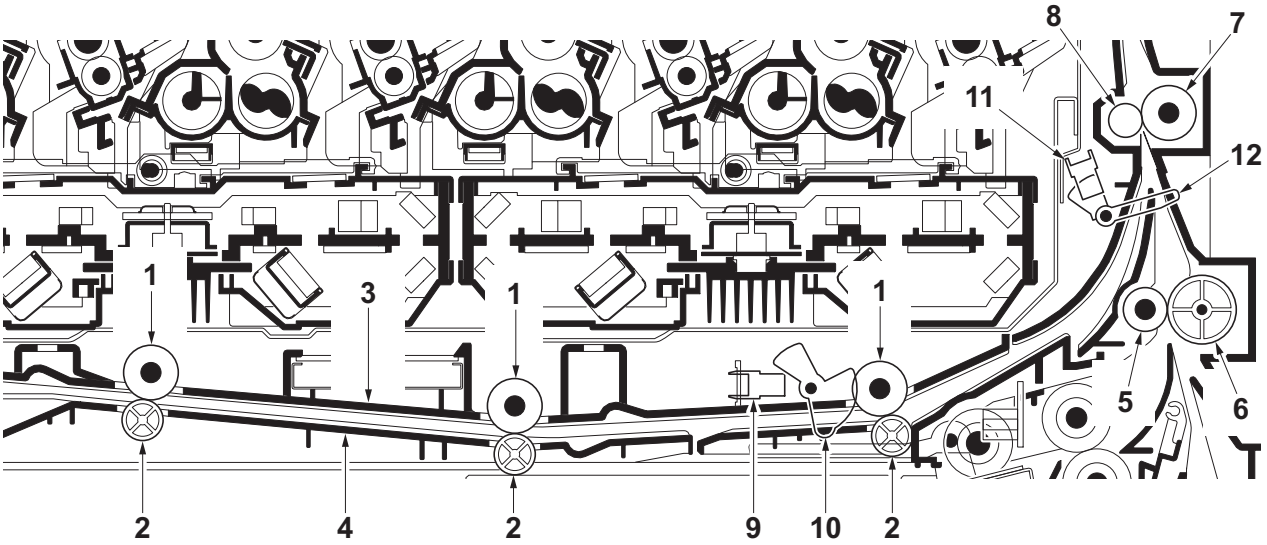

Figure 2-1-5 Paper conveying section

1. MPF feed rollers
2. Feed pulleys
3. MPF feed upper guide
4. MPF feed lower guide
5. Middle roller
6. Middle pulley
7. Front registration roller
8. Rear registration roller
9. MP paper conveying sensor (MPPCS)
10. Actuator (MP paper conveying sensor)
11. Registration sensor (RS)
12. Actuator (registration sensor)

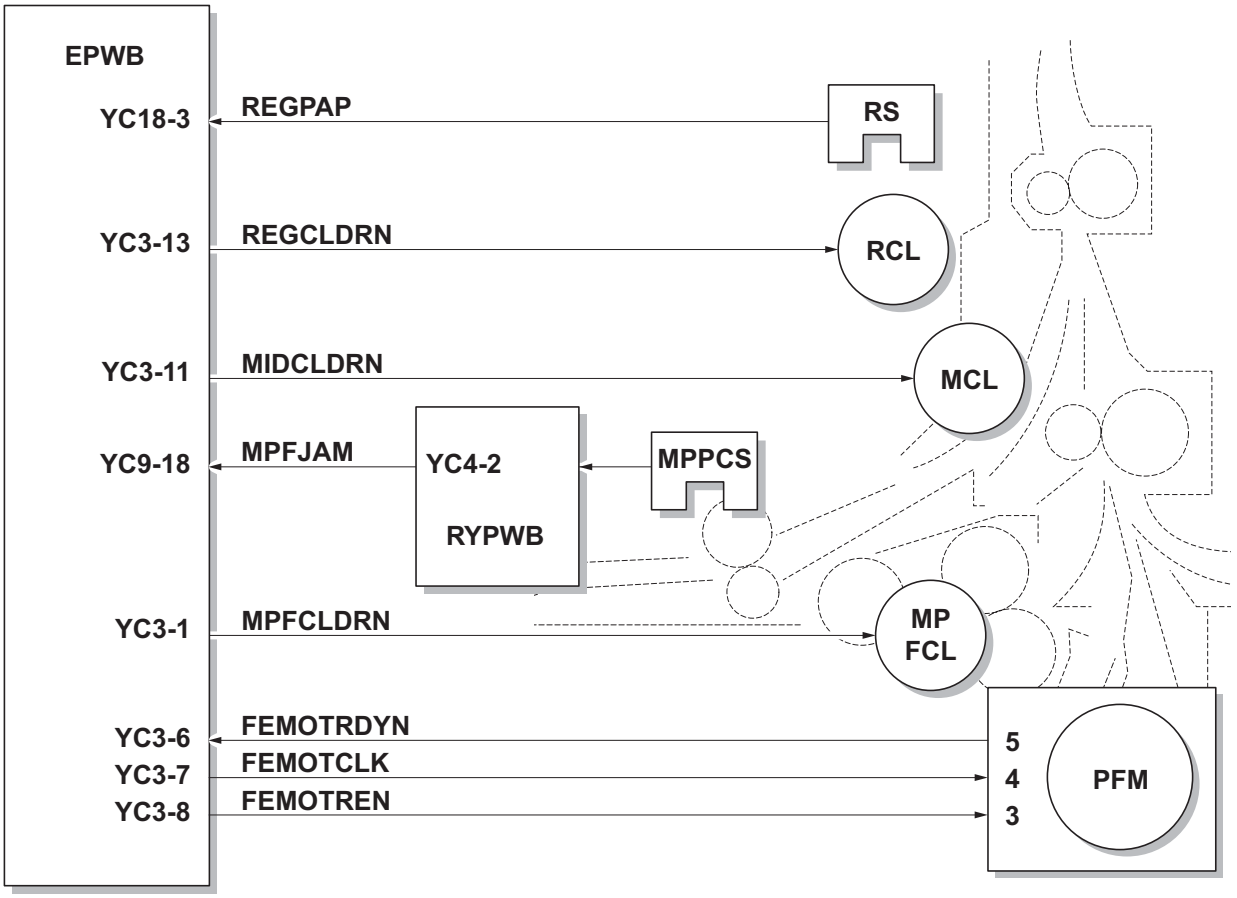

Figure 2-1-6 Paper conveying section block diagram

2-1-2 Drum section

The drum section consists of the drum, the charger roller unit, and the cleaning unit, and the drum surface is uniformly charged in preparation for formation of residual image by laser beam.
After transfer is complete, toner remaining on the drum surface is chipped off with the cleaning blade and is collected to the waste toner box with the drum screw. The cleaning lamp (CL) consists of LEDs and removes residual charge on the drum before main charging.
.

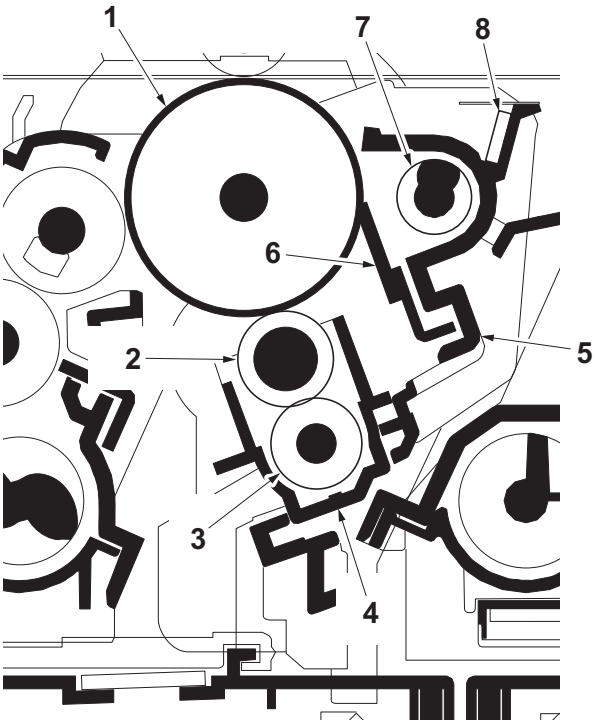

Figure 2-1-7 Drum section

1. Drum
2. Charger roller
3. Charger cleaning roller
4. Charger case
5. Drum frame
6. Cleaning blade
7. Drum screw
8. Cleaning lamp (CL)

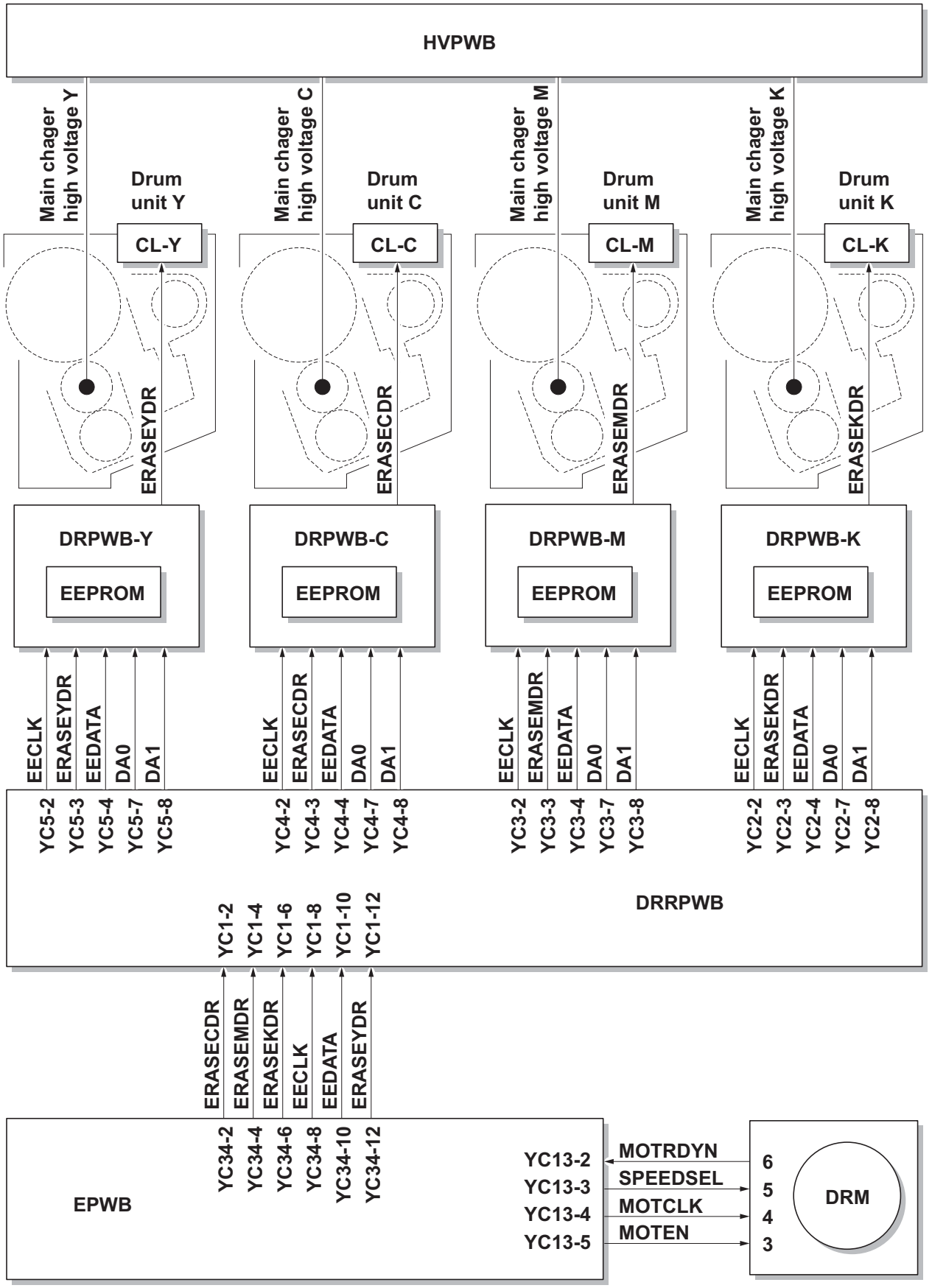

Figure 2-1-8 Drum section block diagram

2-1-3 Developing section

The developing unit consists of the sleeve roller that forms the magnetic brush, the magnet roller, the developing blade and the developing screws that agitate the toner. Also, the toner sensor (TS) checks whether or not toner remains in the developing unit.

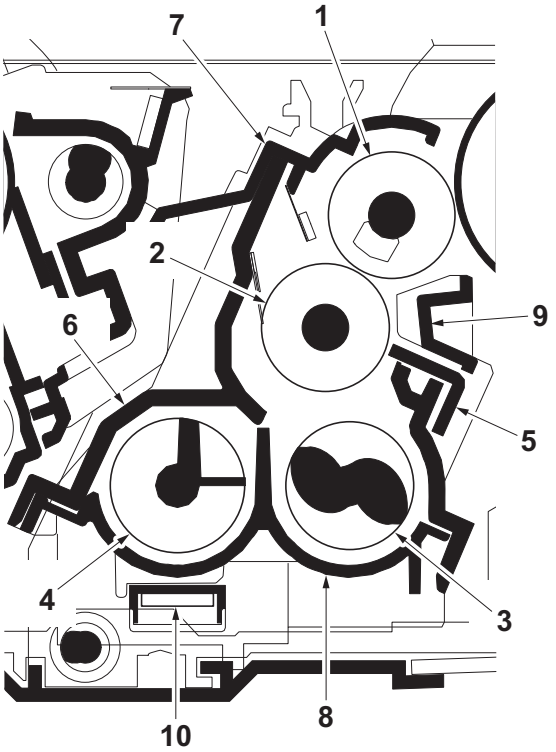

Figure 2-1-9 Developing section

1. Sleeve roller
2. Magnet roller
3. Developing screw A
4. Developing screw B
5. Developing blade
6. Developer case
7. Upper developer cover
8. Developer base
9. Sleeve cover
10. Toner sensor (TS)

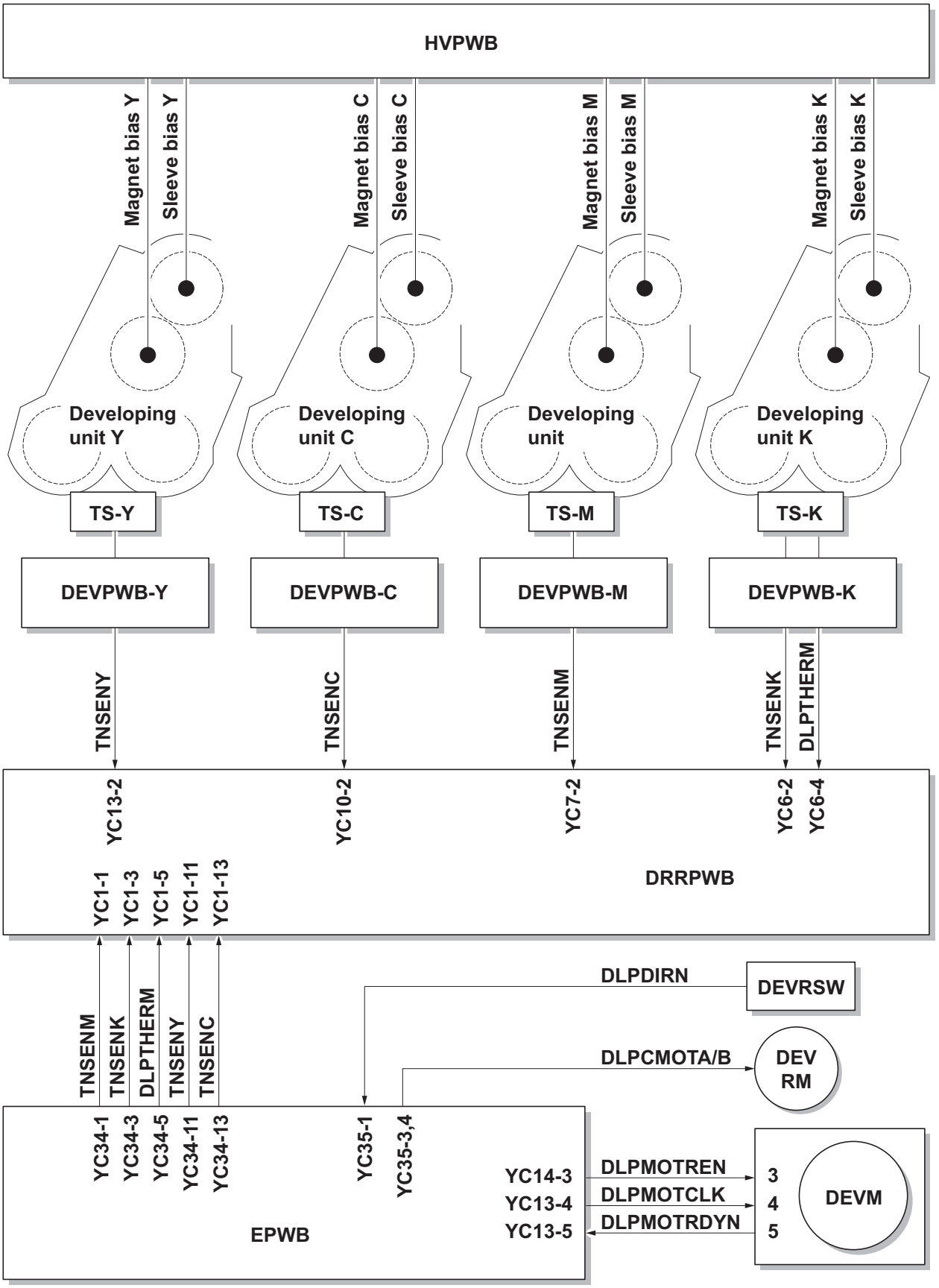

Figure 2-1-10 Developing section block diagram

2-1-4 Optical section

The optical section consists of the image scanner section for scanning and the laser scanner section for printing.

(1) Image scanner section

The original image is illuminated by the LED and scanned by the CCD image sensor in the CCD PWB (CCD-PWB) via the five mirrors and ISU lens, the reflected light being converted to an electrical signal.
If a document processor is used, the image scanner unit stops at the position of the DP contact glass and scans sequentially one row of the image on the original in synchronization with the moving timing of the original in the sub scan direction by driving the DP.

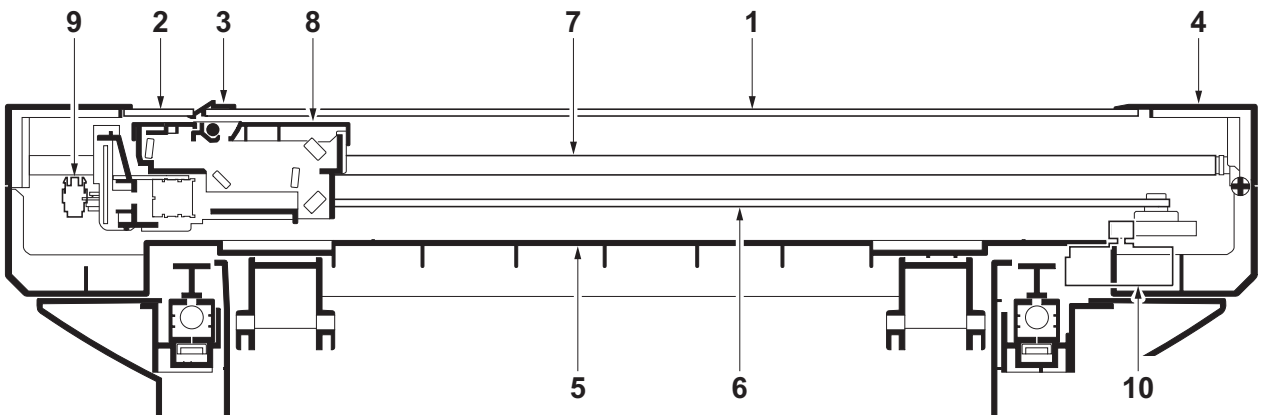

Figure 2-1-11 Scanner unit

1. Contact glass
2. DP contact glass
3. Original size indicator plate
4. ISU top frame
5. ISU bottom frame
6. ISU belt
7. ISU shaft
8. Image scanner unit (ISU)
9. Home position sensor (HPS)
10. ISU motor (ISUM)

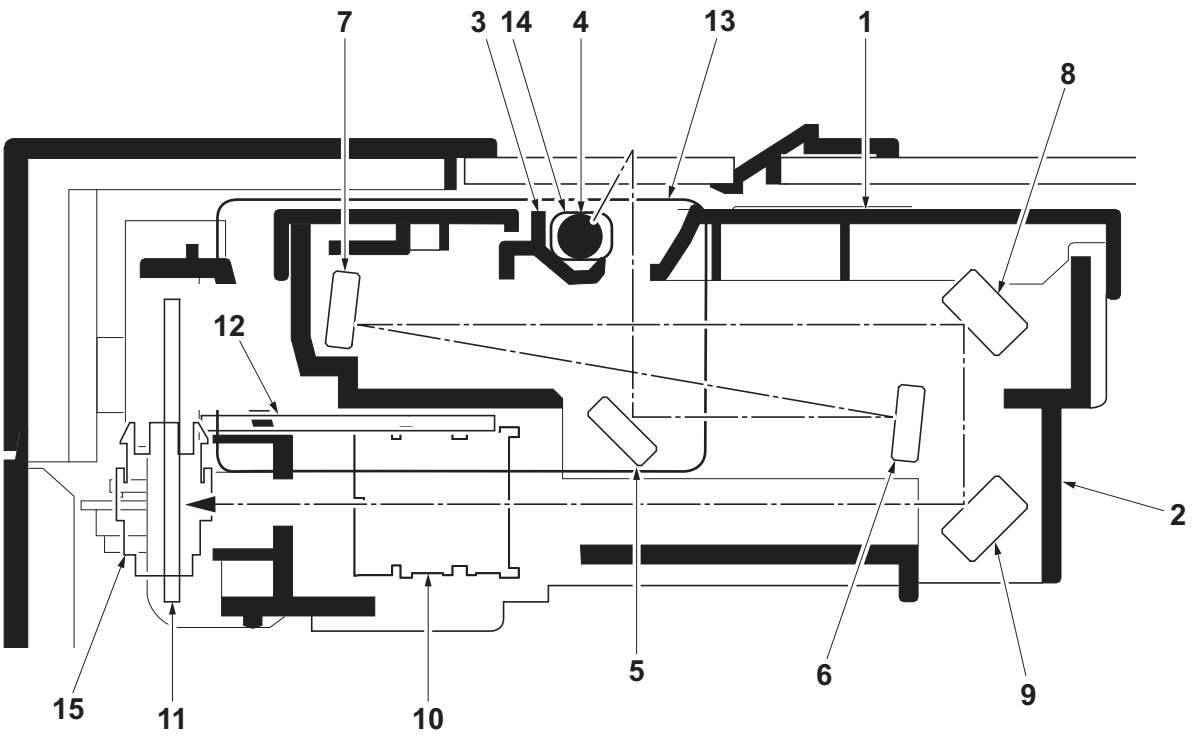

Figure 2-1-12 Image scanner unit (ISU)

1. Unit cover
2. ISU housing
3. Reflector
4. Transparent material
5. Mirror A
6. Mirror B
7. Mirror C
8. Mirror D
9. Mirror E
10. ISU lens
11. CCD PWB (CCDPWB)
12. DriverPWB (DRPWB)
13. LED PWB (LEDPWB)
14. LED
15. Home position sensor (HPS)

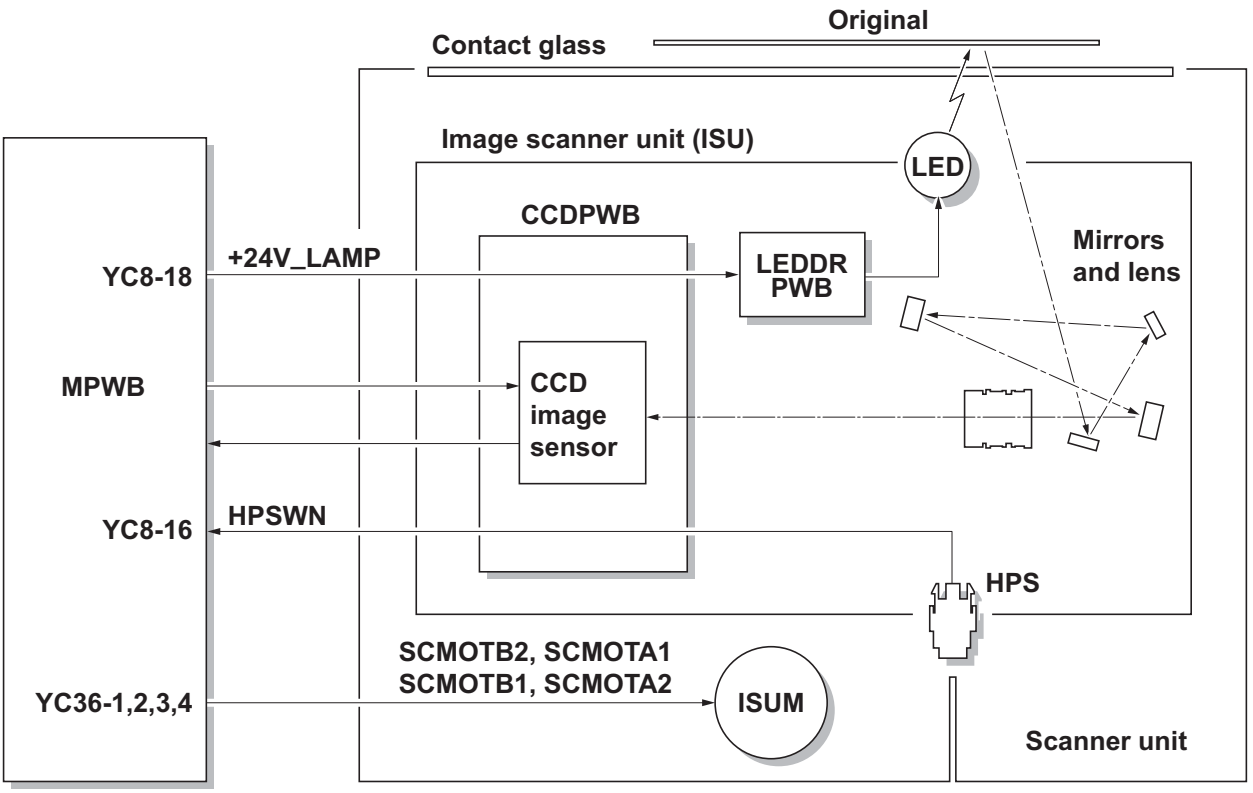

Figure 2-1-13 Scanner unit block diagram

(2) Laser scanner section

The charged surface of the drum is then scanned by the laser beam from the laser scanner unit. The laser beam is dispersed as the polygon motor (PM) revolves to reflect the laser beam over the drum. Various lenses and mirror are housed in the laser scanner unit, adjust the diameter of the laser beam, and focalize it at the drum surface. Also the LSU cleaning motor (LSUCM) is activated to conduct automatically cleaning of the LSU dust shield glass.

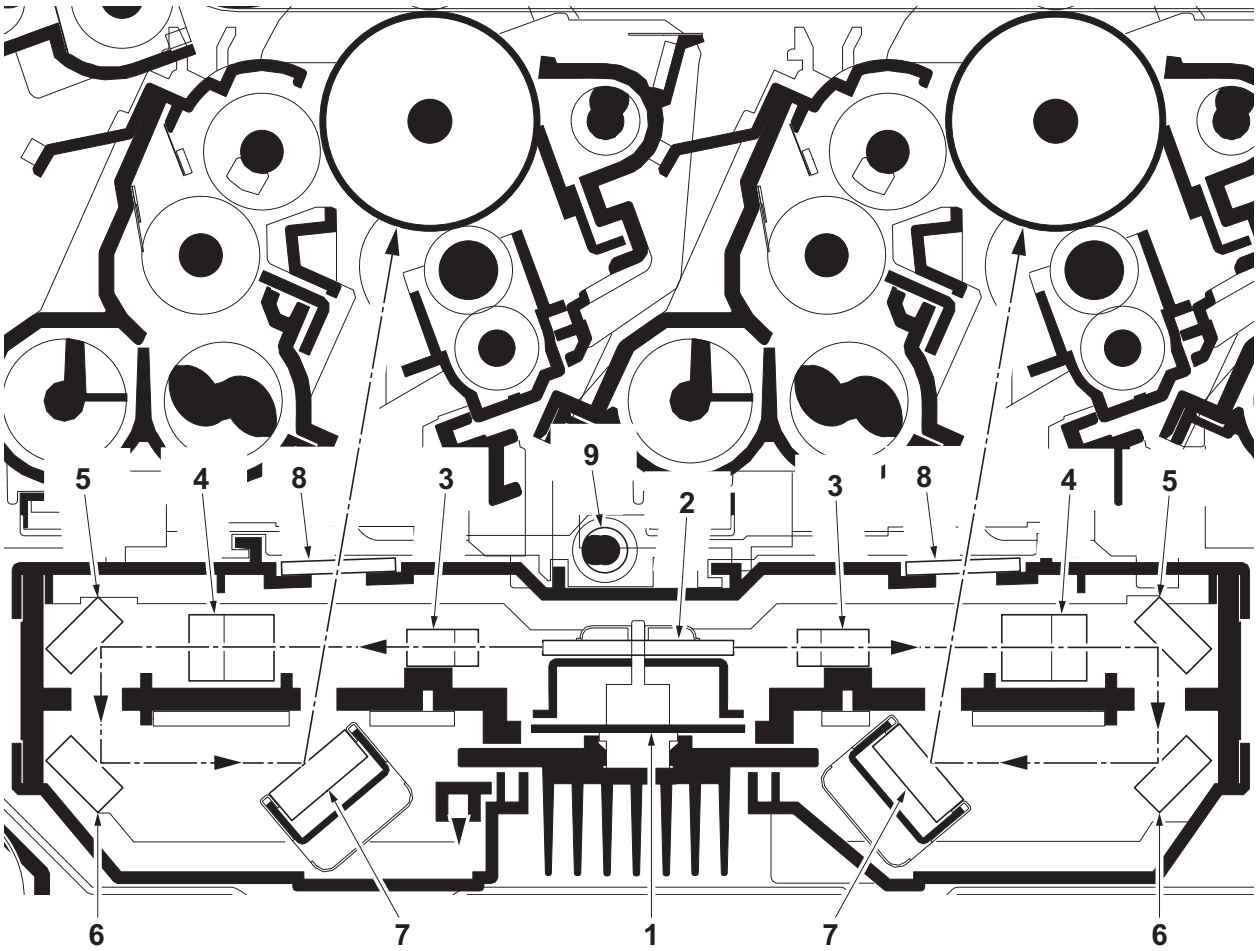

Figure 2-1-14 Laser scanner unit (LSU)

1. Polygon motor (PM)
2. Polygon mirror
3. f-θ lens A
4. f-θ lens B
5. Mirror A
6. Mirror B
7. Mirror C
8. LSU dust shield glass
9. LSU spiral

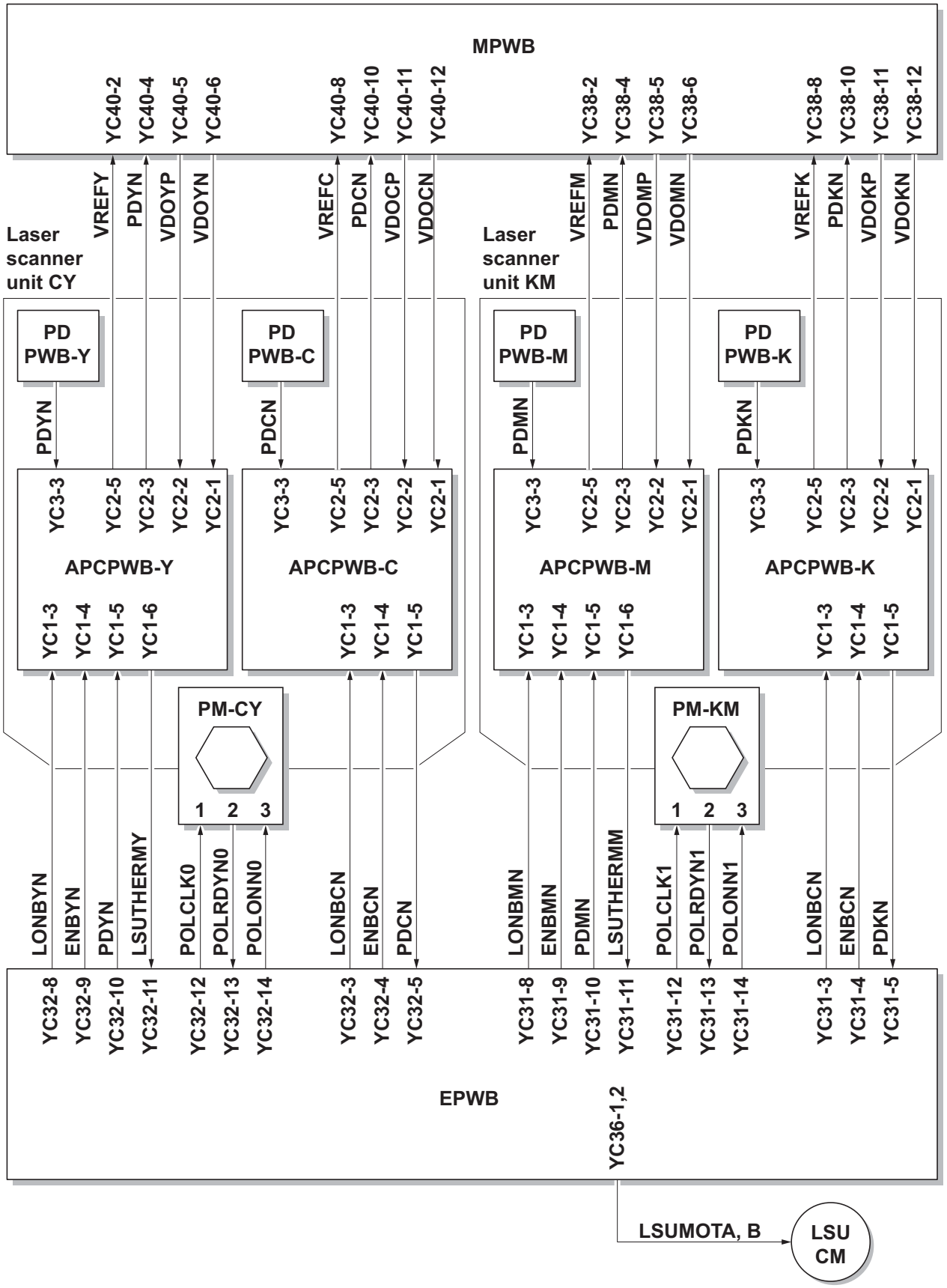

Figure 2-1-15 Laser scanner unit block diagram

2-1-5 Transfer/Separation section

The transfer/separation section consists of the intermediate transfer unit section and the secondary transfer roller section.

(1) Intermediate transfer unit section

The intermediate transfer unit section consists of the transfer cleaning unit, the transfer belt, and the four primary transfer rollers for respective color drums, and forms a full-color toner image by superimposing and transferring single-color toner images formed on each drum onto the transfer belt. Also with the ID sensors (IDS) mounted on the machine frame, the toner density on the transfer belt is measured.
The transfer cleaning unit collects toner remaining on the transfer belt after secondary transfer and forwards it as waste toner to the waste toner box.

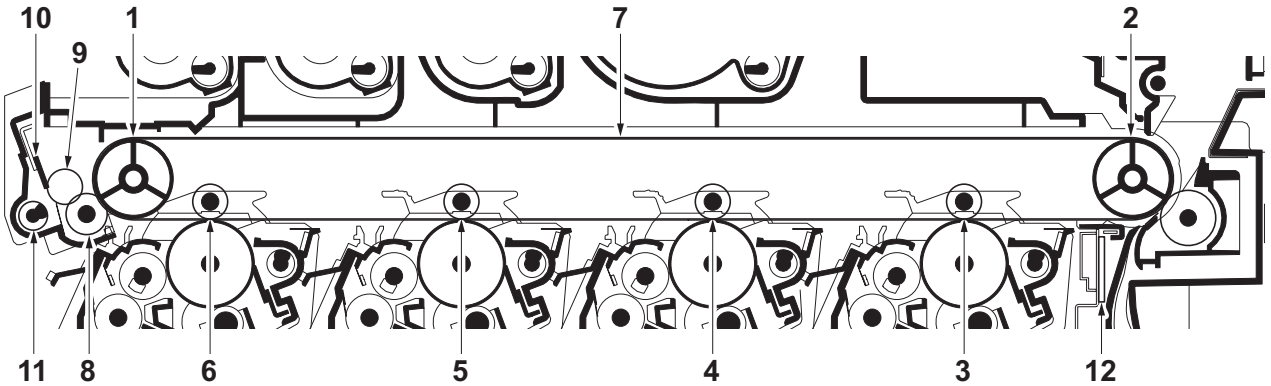

Figure 2-1-16 Intermediate transfer unit section

1. Tension roller
2. Drive roller
3. Primary transfer roller K
4. Primary transfer roller M
5. Primary transfer roller C
6. Primary transfer roller Y
7. Transfer belt
8. Cleaning fur brush
9. Cleaning roller
10. Cleaning blade
11. Cleaning screw
12. ID sensors (IDS)

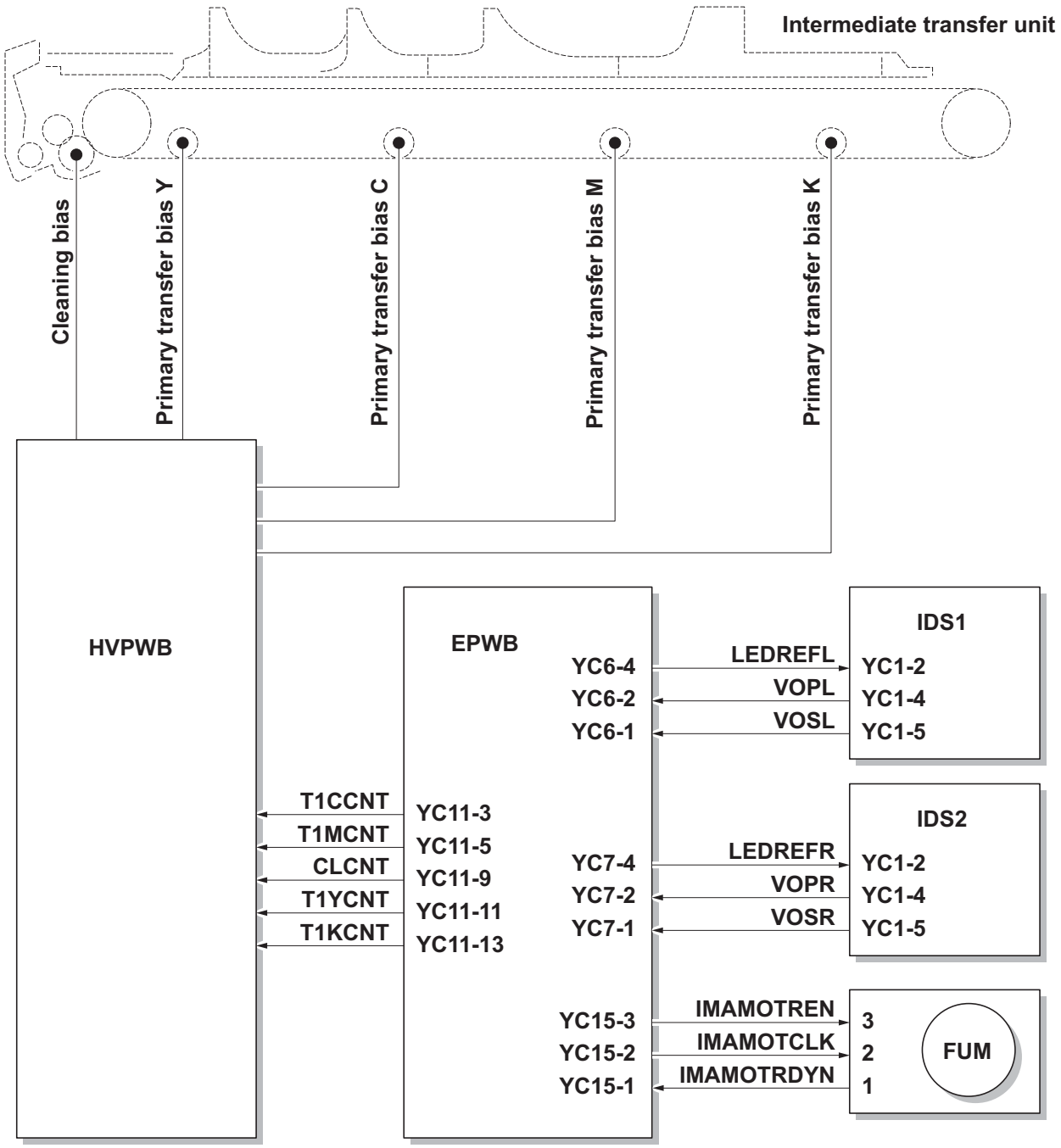

Figure 2-1-17 Intermediate transfer unit section block diagram

(2) Secondary transfer roller section

The secondary transfer roller section consists of the secondary transfer roller mounted to the paper conveying unit and the separation brush. To the secondary transfer roller, DC bias is applied from the high voltage PWB (HVPWB). The toner image formed on the transfer belt is transferred to the paper by the potential difference and the paper is separated by curvature separation.

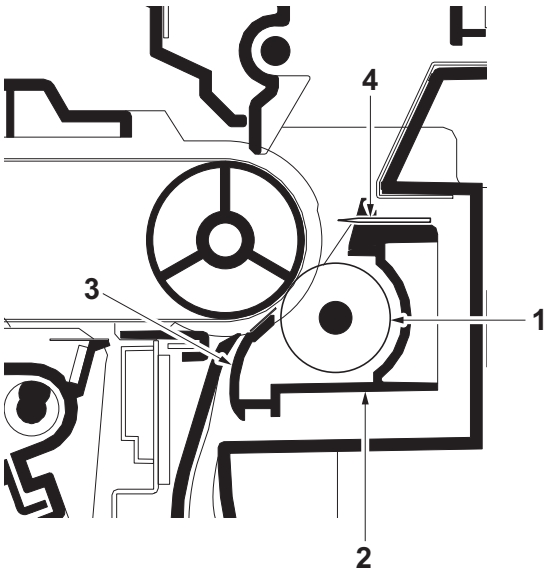

Figure 2-1-18 Secondary transfer roller section

1. Secondary transfer roller
2. Brush holder
3. Paper chute guide
4. Separation brush

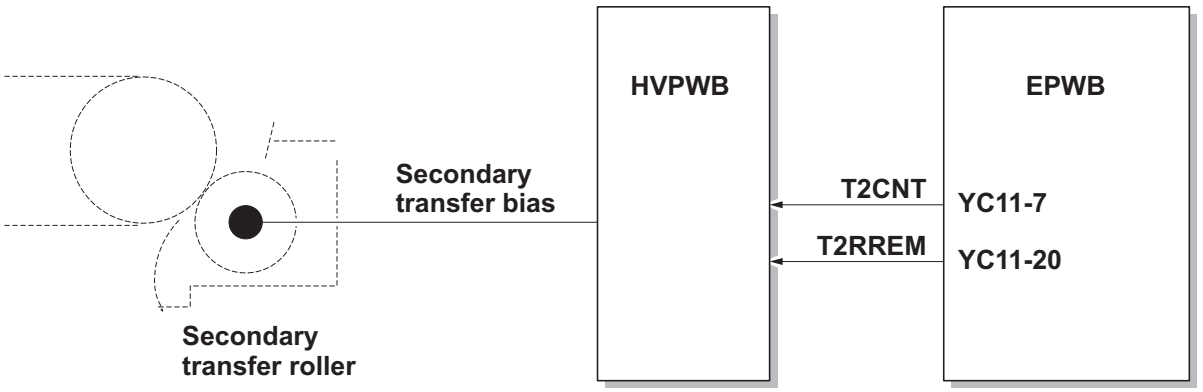

Figure 2-1-19 Secondary transfer roller section block diagram

2-1-6 Fuser section

The paper sent from the transfer/separation section is interleaved between the heat roller and the press roller. The heat roller is heated by the fuser heater (FH), and the toner is fused by heat and pressure and fixed onto the paper because the press roller is pressed by the fuser press spring. The surface temperature of heat roller is detected by the fuser thermistor (FTH) and controlled by the engine PWB (EPWB). If the fuser section shows extremely high temperature, the power line will be shut off and the fuser heater (FH) is forced to turn off.

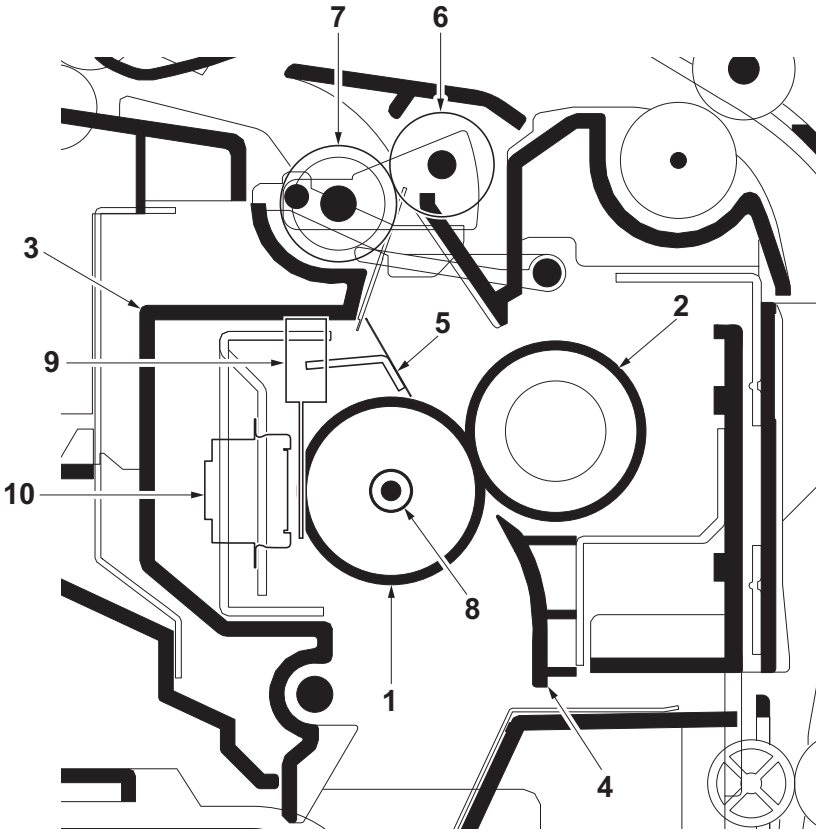

Figure 2-1-20 Fuser section

1. Heat roller
2. Press roller
3. Upper fuser frame
4. Fuser paper guide
5. Separators
6. Eject roller
7. Eject pulley
8. Fuser heater (FH)
9. Fuser thermistor (FTH)
10. Fuser thermostat (FTS)

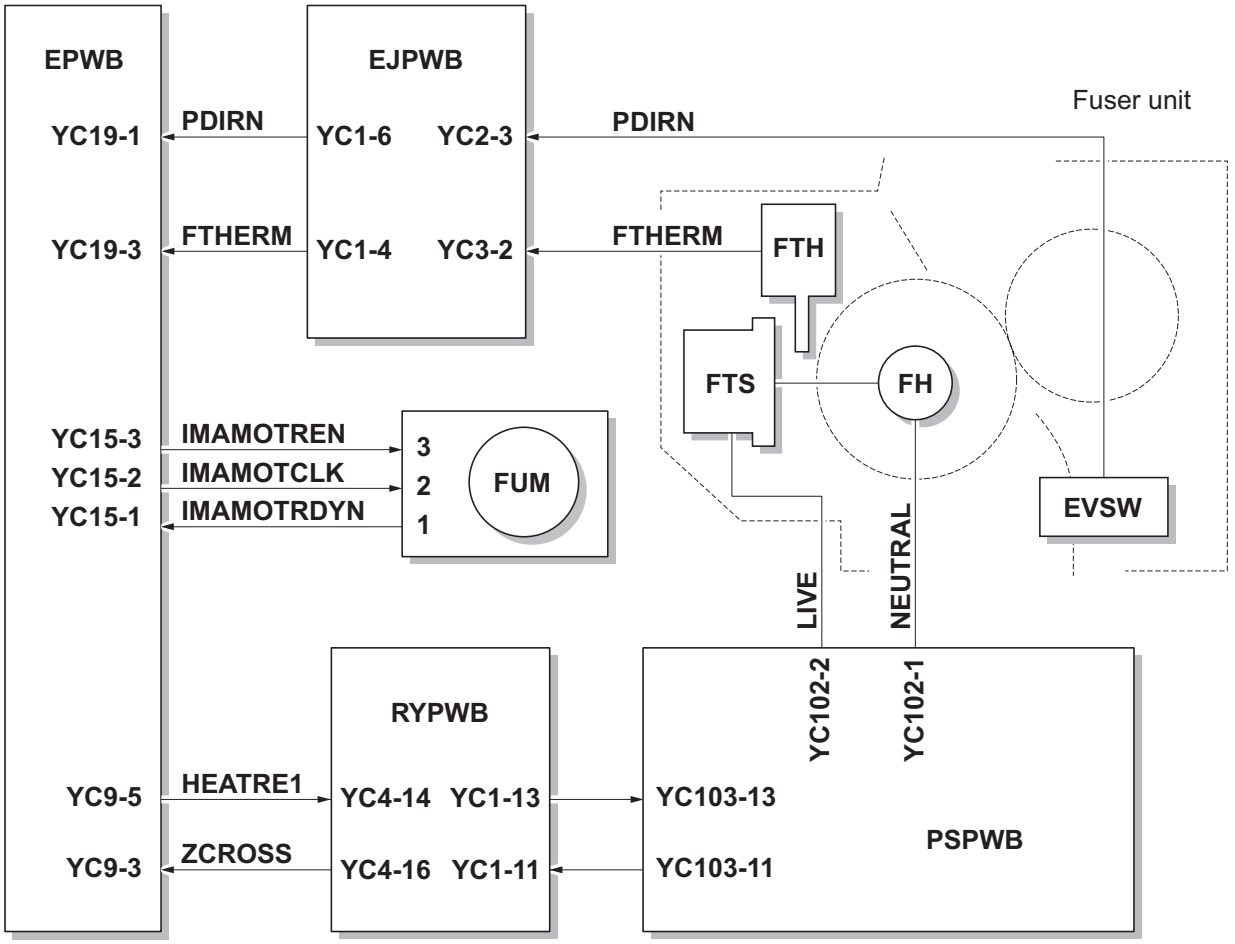

Figure 2-1-21 Fuser section block diagram

2-1-7 Eject/Feedshift section

The paper eject/feedshift section consists of the conveying path which sends the paper that has passed the fuser section to the inner tray or the duplex conveying section.

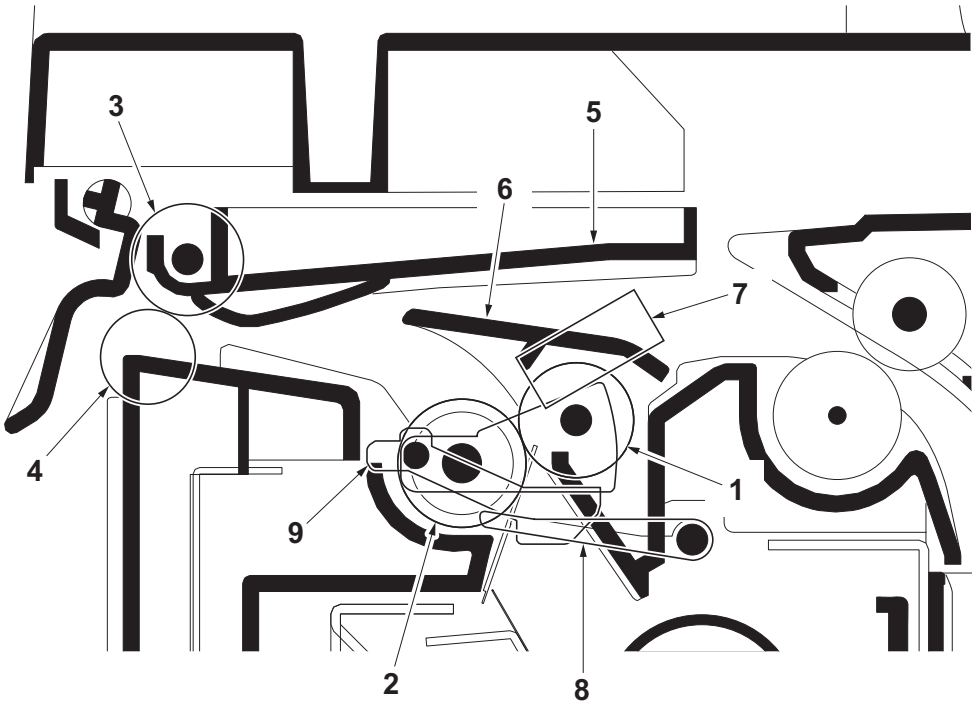

Figure 2-1-22 Eject/Feed shift section

1. Eject roller
2. Eject pulley
3. Eject roller
4. Eject pulley
5. Upper eject guide
6. Change guide
7. Eject sensor (ES)
8. Actuator (eject sensor)
9. Actuator (eject sensor)

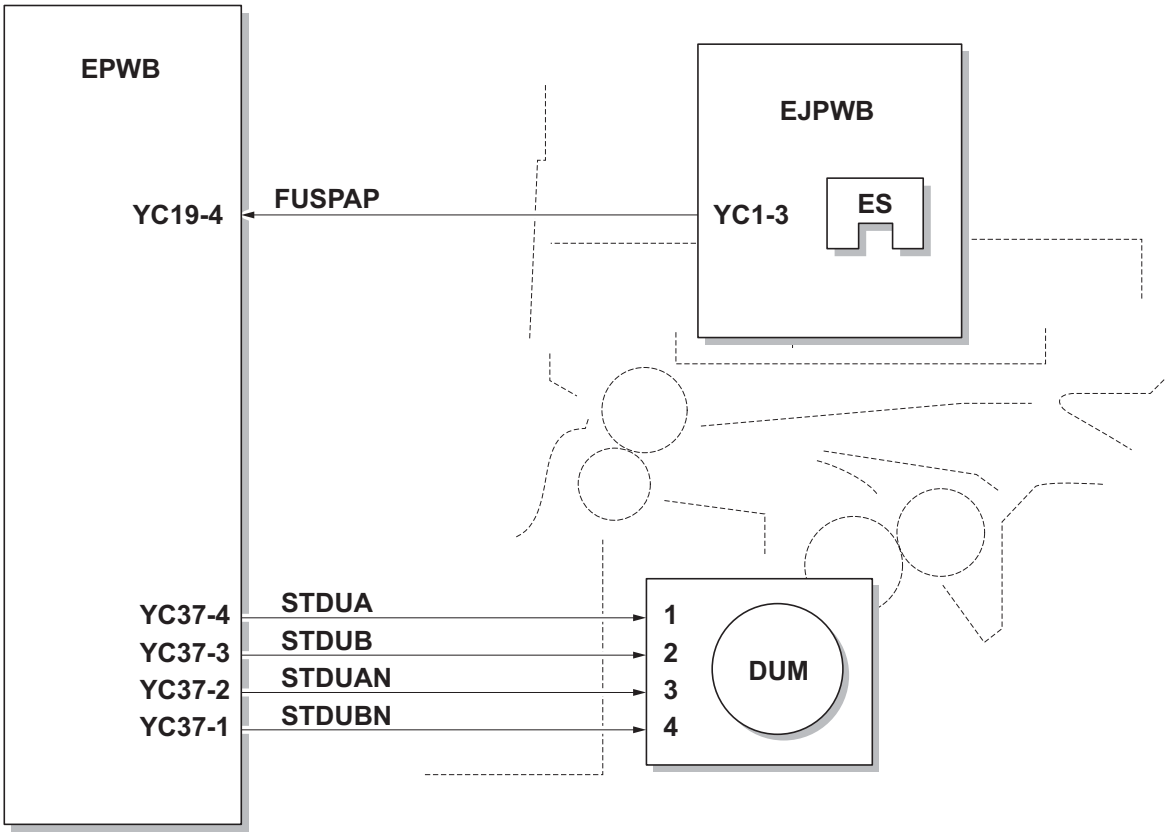

Figure 2-1-23 Eject/Feed shift section block diagram

2-1-8 Duplex conveying section

The duplex conveying section consists of conveying path which sends the paper sent from the eject/feedshift section to the paper feed/conveying section when duplex printing.

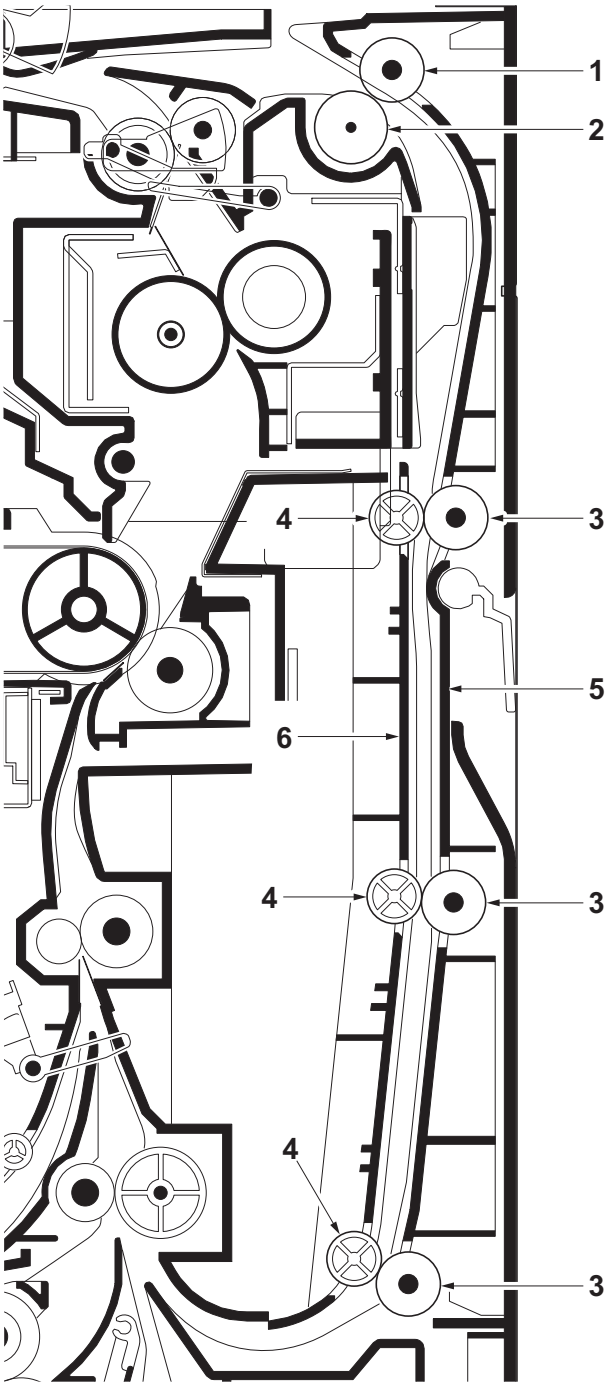

Figure 2-1-24 Duplex conveying section

1. Duplex roller L
2. Eject pulley
3. Duplex rollers S
4. Duplex pulleys
5. Duplex frame
6. Duplex feed guide

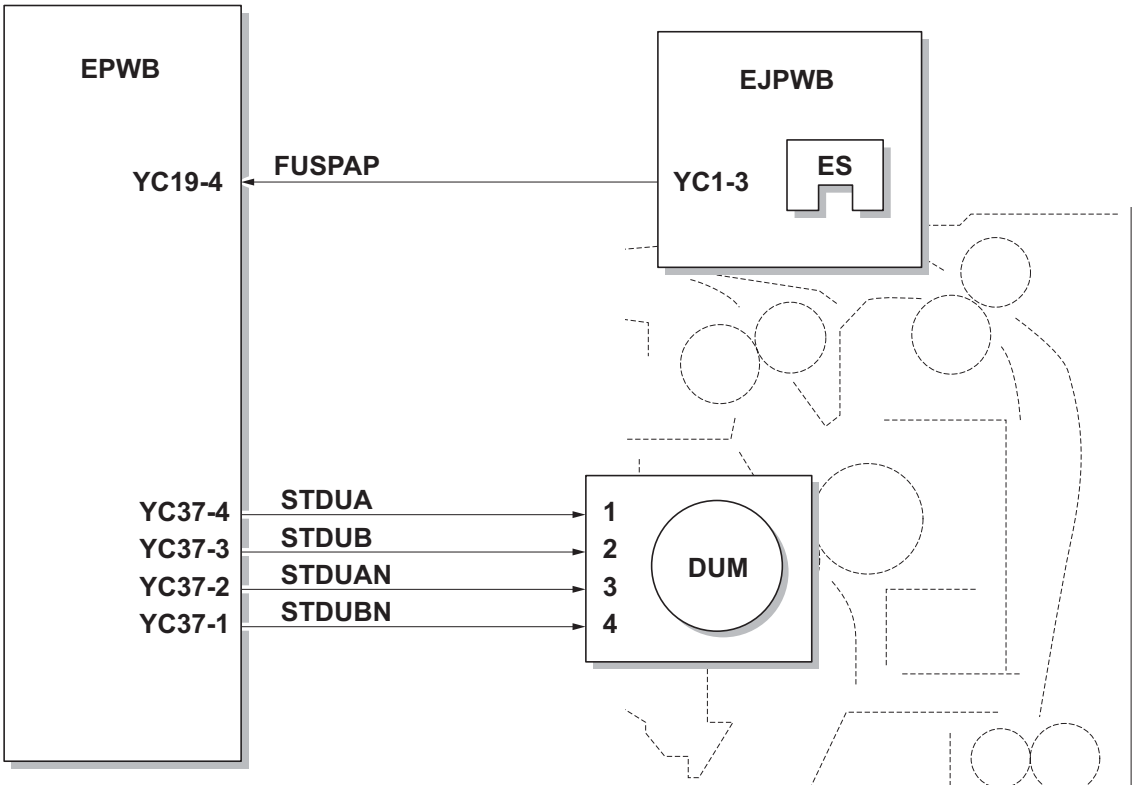

Figure 2-1-25 Duplex conveying section block diagram

2-1-9 Document processor

(1) Original feed section

The original feed section consists of the parts shown in figure. An original placed on the original table is conveyed to the original conveying section. Original is fed by the rotation of the DP forwarding pulley and DP feed pulley.

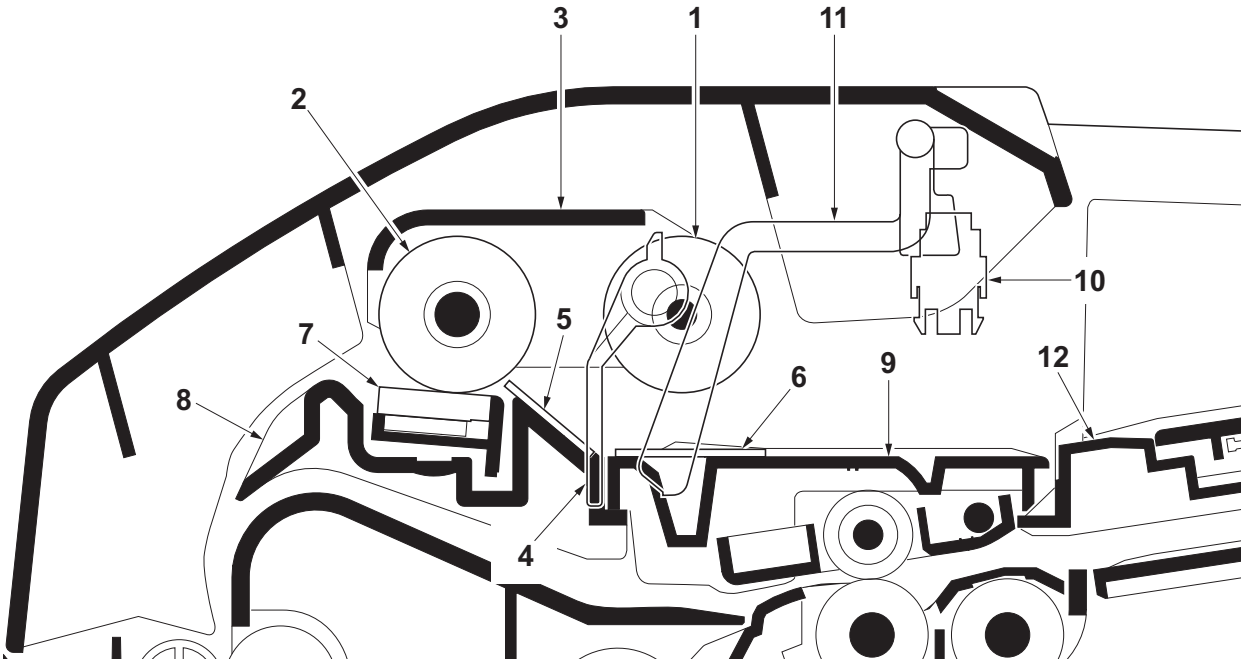

Figure 2-1-26 Original feed section

1. DP forwarding pulley
2. DP feed pulley
3. LF holder
4. PF stopper
5. Front separation pad
6. LF friction plate
7. DP separation pad
8. Upper guide
9. Switchback guide
10. DP original sensor (DPOS)
11. Actuator (DP original sensor)
12. Original table

]

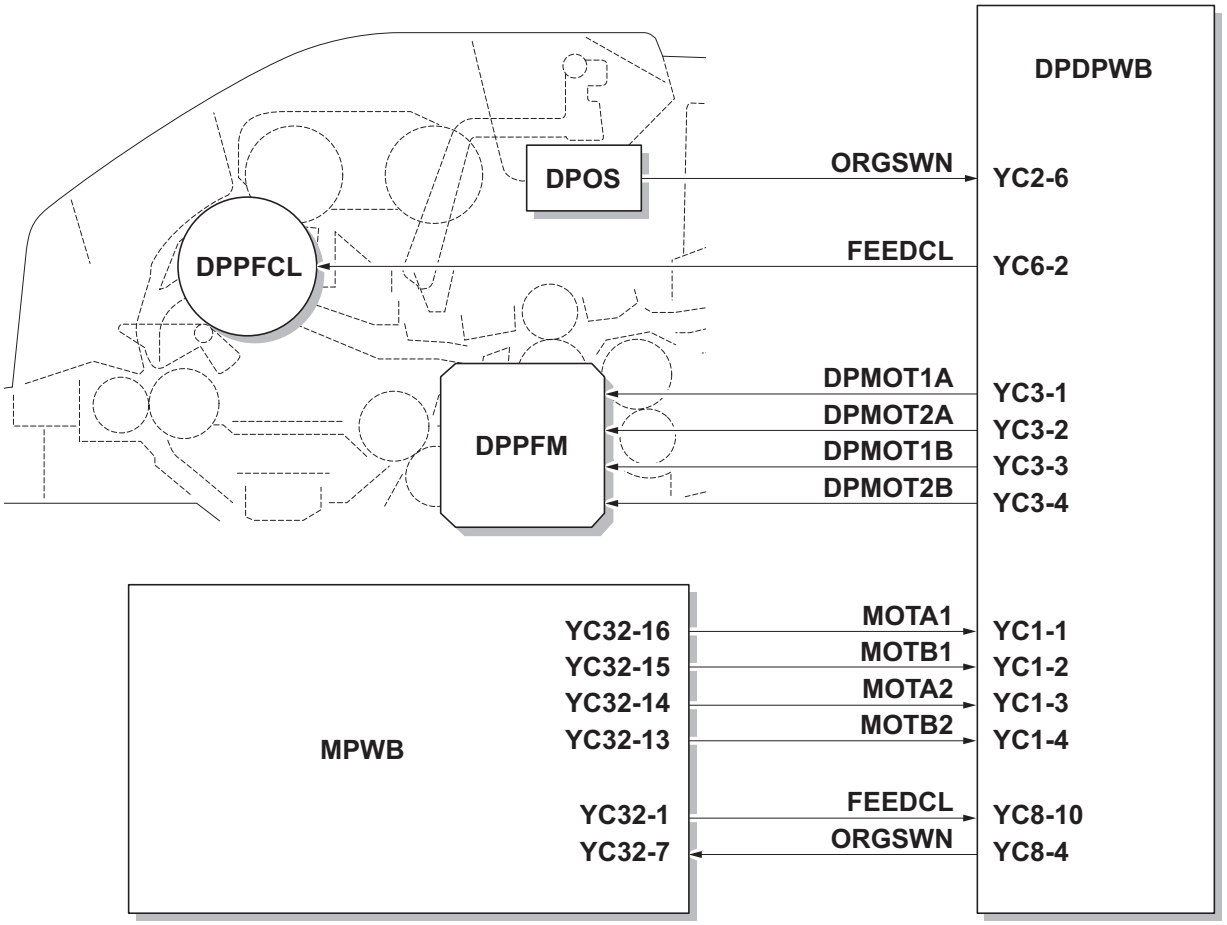

Figure 2-1-27 Original feed section block diagram

(2) Original conveying section

The original conveying section consists of the parts shown in figure. A conveyed original is scanned by the optical section (CCD) of main machine when it passes through the DP contact glass of main machine.

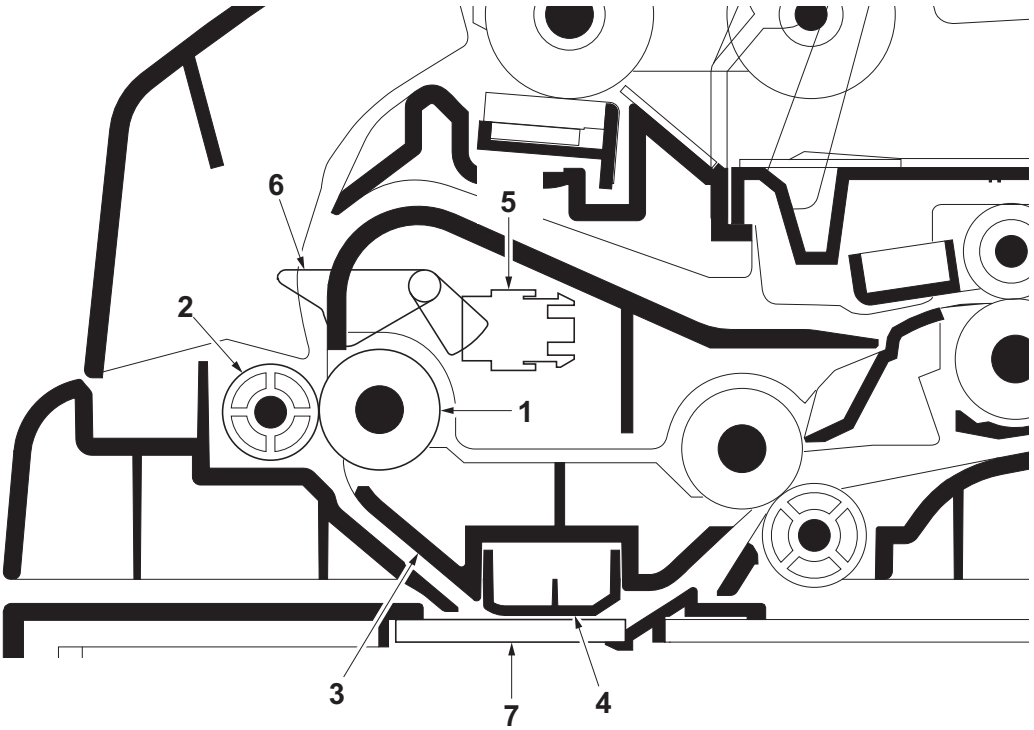

Figure 2-1-28 Original conveying section

1. Conveying roller A
2. Conveying pulley
3. Conveying bottom
4. Reading guide
5. DP timing sensor (DPTS)
6. Actuator (DP timing sensor)
7. DP contact glass

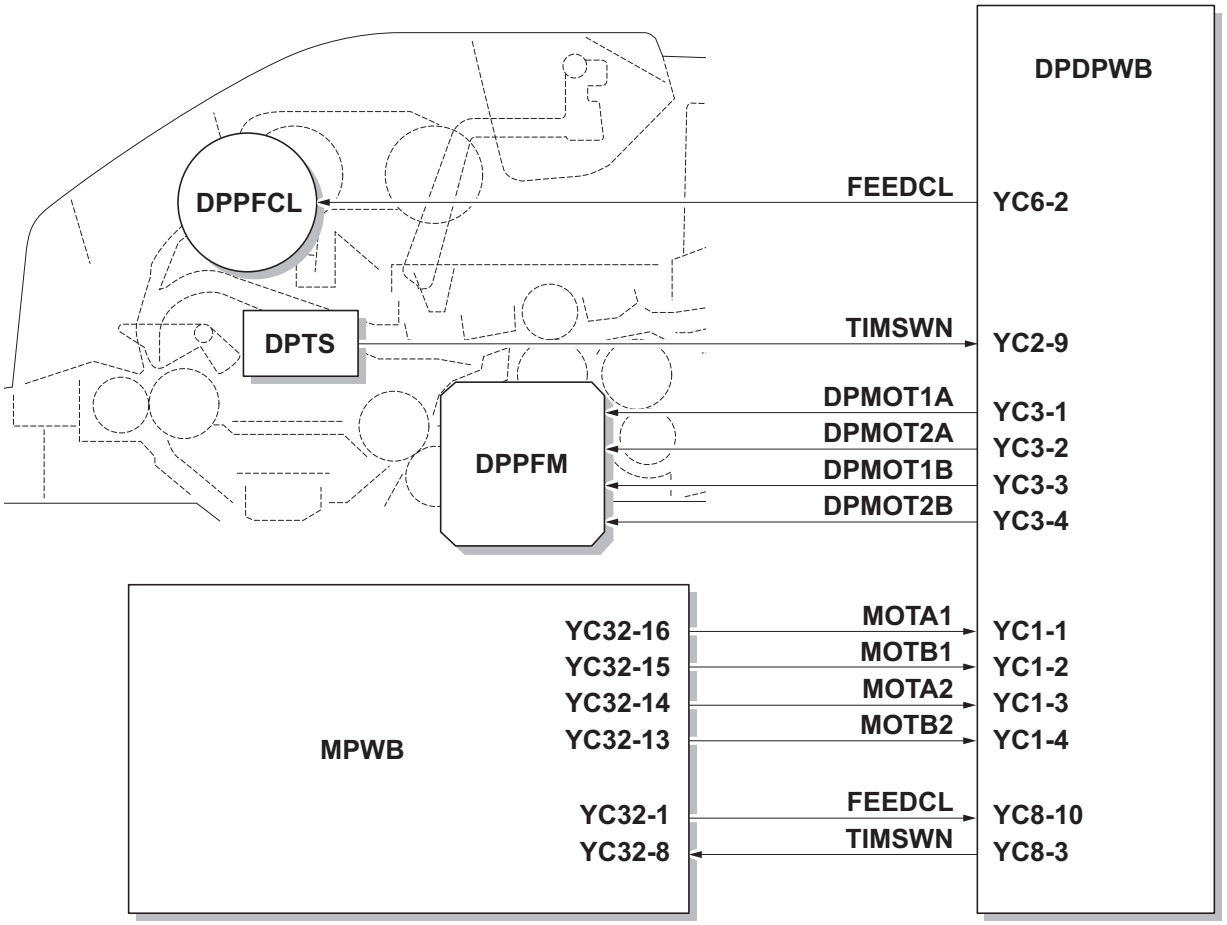

Figure 2-1-29 Original conveying section block diagram

(3) Original switchback/eject sections

The original switchback/eject sections consists of the parts shown in figure. An original of which scanning is complete is ejected to the original eject table by the eject roller. In the case of duplex switchback scanning, an original is conveyed temporarily to the switchback tray and conveyed again to the original conveying section by the switchback roller.

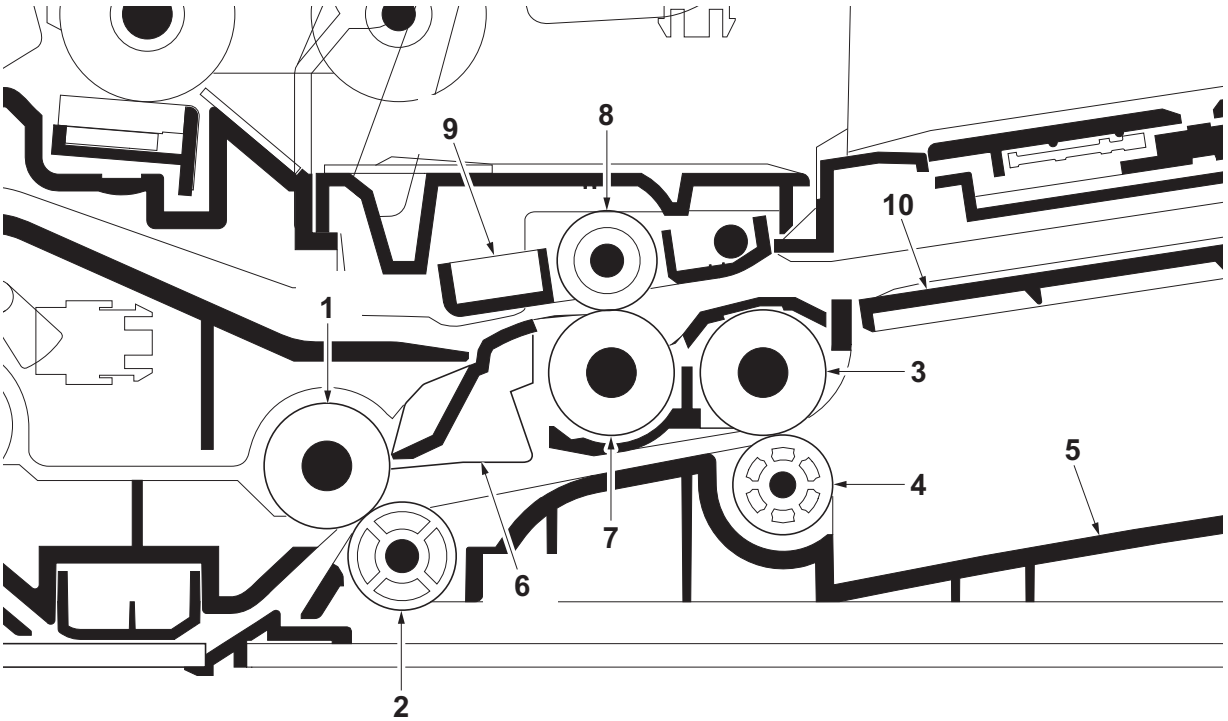

Figure 2-1-30 Original switchback/eject sections

1. Conveying roller B
2. Conveying pulley
3. Eject roller
4. Eject pulley
5. Original eject table
6. Switchback guide
7. Switchback roller
8. Switchback pulley
9. Switchback pulley mount
10. Switchback tray

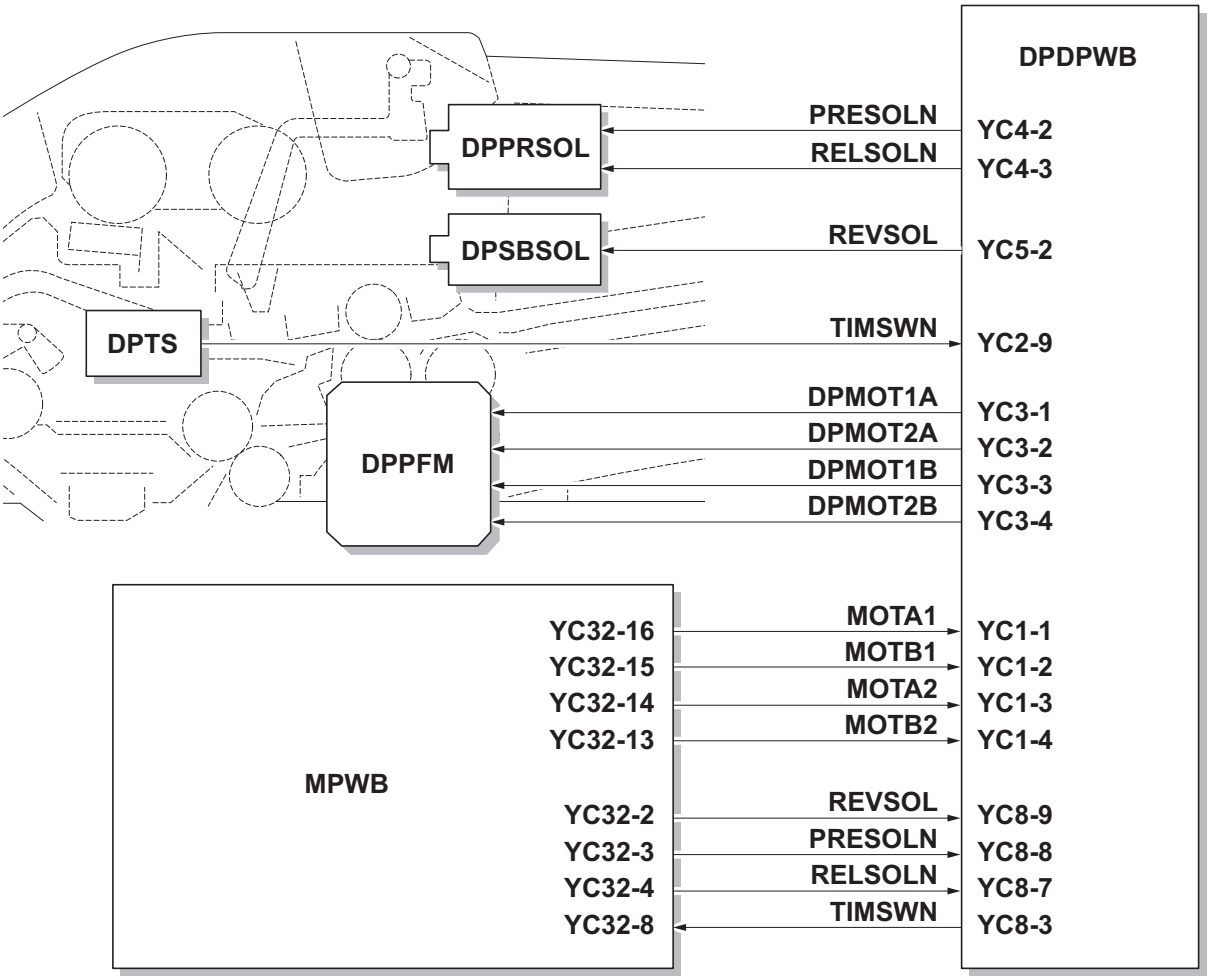

Figure 2-1-31 Original switchback/eject sections block diagram

2-2-1 Electrical parts layout

(1) PWBs

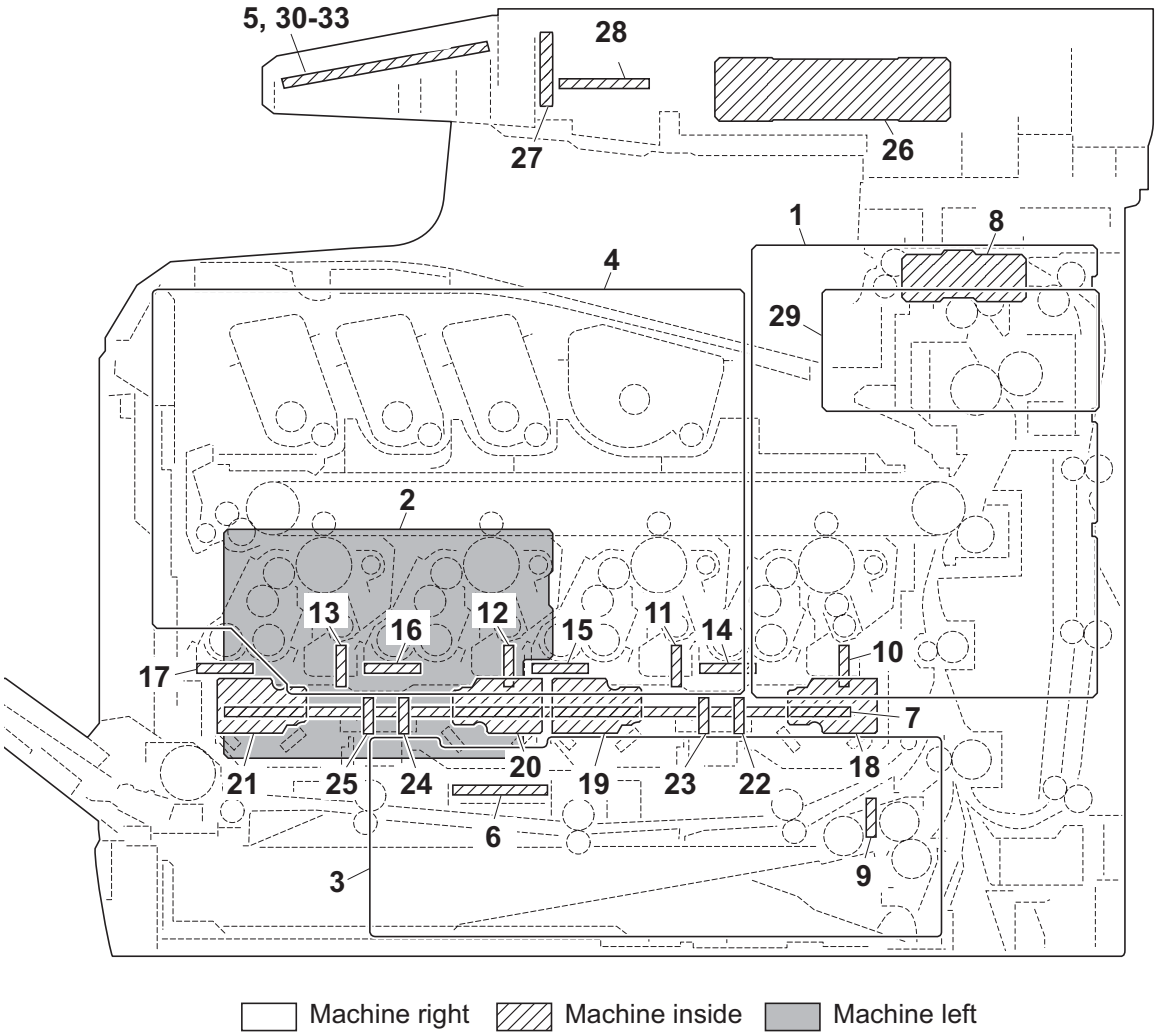

Figure 2-2-1 PWBs

1. Main PWB (MPWB) ..... Controls the software such as the print data processing and provides the interface with computers.
2. Engine PWB (EPWB)..... Controls printer hardware such as high voltage/bias output control, paper conveying system control, and fuser temperature control, etc.
3. Power source PWB (PSPWB) ..... After full-wave rectification of AC power source input, switching for converting to 24 V DC and 5V DC for output. Controls the fuser heater.
4. High voltage PWB (HVPWB) ..... Generates main charging, developing bias, transfer bias and cleaning bias.
5. Operation panel PWB (OPPWB) ..... Controls the touch panel. Consists the touch panel, LED indicators and key switches.
6. Relay PWB (RPWB) ..... Consists of wiring relay circuit between main PWB and engine PWB and power source PWB.
7. Drum relay PWB (DRRPWB)..... Consists of wiring relay circuit between engine PWB and the drum units and developing units.

8. Eject PWB (EJPWB) ..... Consists of wiring relay circuit between engine PWB and each electrical component (eject section).
9. Cassette PWB (CPWB) ..... Interconnects the engine PWB and each electrical component (cassette section).
10. Drum PWB K (DRPWB-K) ..... Relays wirings from electrical components on the drum unit K. Drum individual information in EEPROM storage.
11. Drum PWB M (DRPWB-M) ..... Relays wirings from electrical components on the drum unit M. Drum individual information in EEPROM storage.
12. Drum PWB C (DRPWB-C) ..... Relays wirings from electrical components on the drum unit C. Drum individual information in EEPROM storage.
13. Drum PWB Y (DRPWB-Y) ..... Relays wirings from electrical components on the drum unit Y. Drum individual information in EEPROM storage.
14. Developing PWB K (DEVPWB-K) ..... Relays wirings from electrical components on the developing unit K.
15. Developing PWB M (DEVPWB-M) ..... Relays wirings from electrical components on the developing unit M.
16. Developing PWB C (DEVPWB-C) ..... Relays wirings from electrical components on the developing unit C.
17. Developing PWB Y (DEVPWB-Y) ..... Relays wirings from electrical components on the developing unit Y.
18. APC PWB K (APCPWB-K) ..... Generates and controls the laser beam (black).
19. APC PWB M (APCPWB-M) ..... Generates and controls the laser beam (magenta).
20. APC PWB C (APCPWB-C) ..... Generates and controls the laser beam (cyan).
21. APC PWB Y (APCPWB-Y) ..... Generates and controls the laser beam (yellow).
22. PD PWB K (PDPWB-K) ..... Controls horizontal synchronizing timing of laser beam (black).
23. PD PWB M (PDPWB-M) ..... Controls horizontal synchronizing timing of laser beam (magenta).
24. PD PWB C (PDPWB-C) ..... Controls horizontal synchronizing timing of laser beam (cyan).
25. PD PWB Y (PDPWB-Y) ..... Controls horizontal synchronizing timing of laser beam (yellow).
26. CCD PWB (CCDPWB) ..... Reads the image of originals.
27. LED PWB (LEDPWB) ..... Controls the LED.
28. LED Driver PWB (LEDDRPWB) ..... Controls the LED.
29. Fax control PWB (FCPWB)* ..... Modulates, demodulates, compresses, decompresses and smoothes out image data, and converts resolution of image data.
30. Operation panel PWB L (OPPWB-L) .... Controls the key switches and LED.
31. Operation panel PWB R (OPPWB-R) ... Controls the key switches and LED.
32. LCD relay PWB (LCDRPWB) ..... Consists of wiring relay circuit between operation panel PWB and the LED.
33. LCD PDB (LCDPWB) ..... Controls the LCD.

*: 4 in 1 model (with FAX) only.

List of correspondences of PWB names

No.	Name used in service manual	Name used in parts list
1	Main PWB (MPWB)	PARTS PWB MAIN ASSY SP
2	Engine PWB (EPWB)	PARTS PWB ENGINE ASSY SP
3	Power source PWB (PSPWB)	PARTS SWITCHING REGULATOR SP
4	High voltage PWB (HVPWB)	PARTS HIGH VOLTAGE UNIT SP
5	Operation panel PWB (OPPWB)	-
6	Relay PWB (RPWB)	-
7	Drum relay PWB (DRRPWB)	-
8	Eject PWB (EJPWB)	PARTS PWB ASSY EXIT SP
9	Cassette PWB (CPWB)	PARTS PWB ASSY CASSETTE SP
10	Drum PWB K (DRPWB-K)	-
11	Drum PWB M (DRPWB-M)	-
12	Drum PWB C (DRPWB-C)	-
13	Drum PWB Y (DRPWB-Y)	-
14	Developing PWB K (DEVPWB-K)	-
15	Developing PWB M (DEVPWB-M)	-
16	Developing PWB C (DEVPWB-C)	-
17	Developing PWB Y (DEVPWB-Y)	-
18	APC PWB K (APCPWB-K)	-
19	APC PWB M (APCPWB-M)	-
20	APC PWB C (APCPWB-C)	-
21	APC PWB Y (APCPWB-Y)	-
22	PD PWB K (PDPWB-K)	-
23	PD PWB M (PDPWB-M)	-
24	PD PWB C (PDPWB-C)	-
25	PD PWB Y (PDPWB-Y)	-
26	CCD PWB (CCDPWB)	-
27	LED PWB (LEDPWB)	-
28	LED driver PWB (LEDDRPWB)	-
29	Fax control PWB (FCPWB)	PARTS FAX UNIT J SP
30	Operation panel PWB L (OPPWB-L)	-
31	Operation panel PWB R (OPPWB-R)	-
32	LCD relay PWB (LCDRPWB)	-
33	LCD PDB (LCDPWB)	-

(2) Switches and sensors

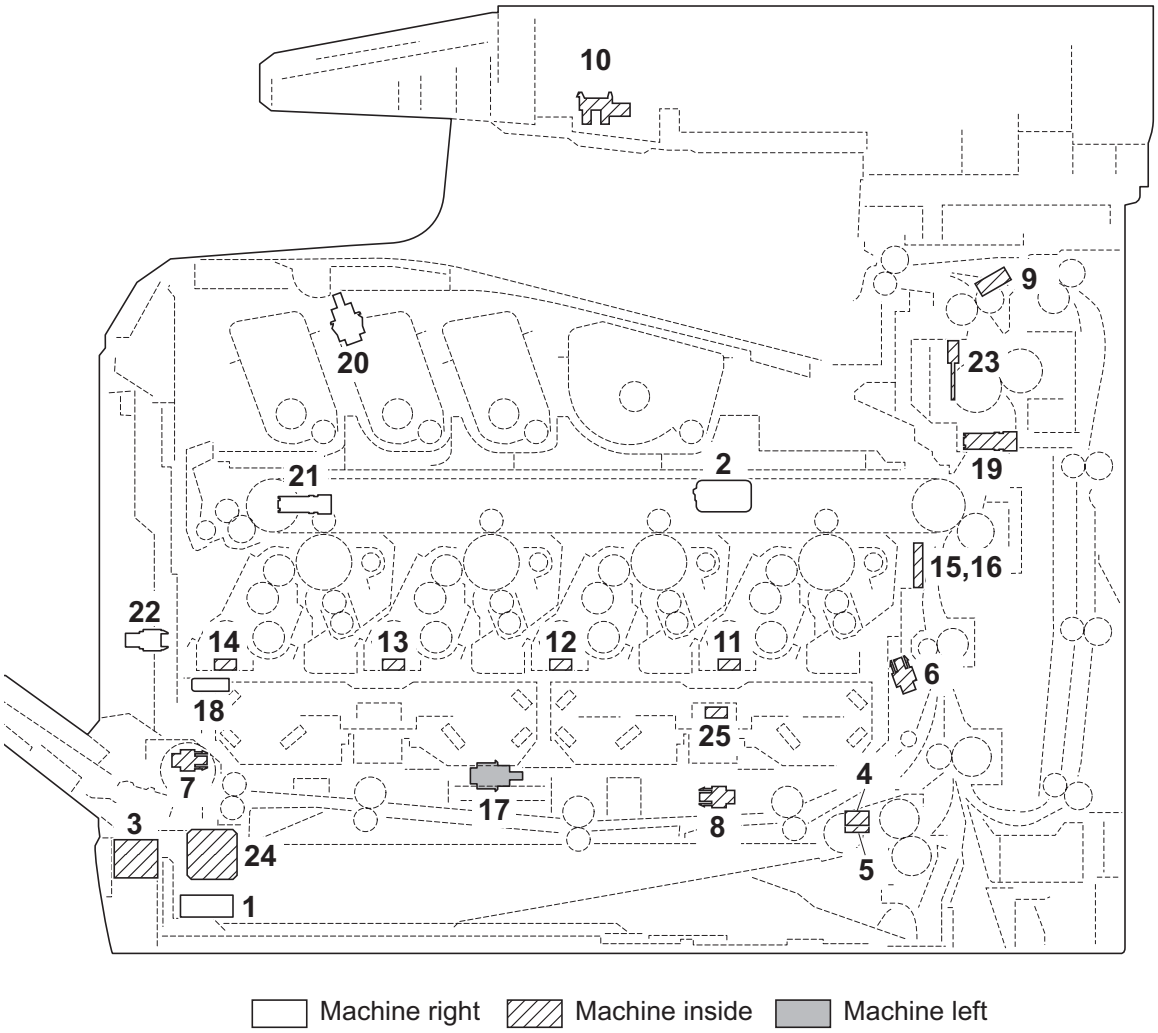

Figure 2-2-2 Switches and sensors

1. Main power switch (MSW) ..... Turns ON/OFF the AC power source.
2. Interlock switch (ILSW) ..... Shuts off 24 V DC power line when the inner tray and rear cover are opened.
3. Cassette size switch (CSSW) ..... Detects the paper size dial setting of the paper setting dial.
4. Paper sensor (PS) ..... Detects the presence of paper in the cassette.
5. Lift sensor (LS)..... Detects activation of upper limit of the bottom plate.
6. Registration sensor (RS)..... Controls the secondary paper feed start timing.
7. MP paper sensor (MPPS) ..... Detects the presence of paper on the MP tray.
8. MP paper conveying sensor (MPFS) .... Detects a paper misfeed in the MP paper conveying section.
9. Eject sensor (ES) ..... Detects a paper misfeed in the fuser or eject section.
10. Home position sensor (HPS) ..... Detects the ISU in the home position.
11. Toner sensor K (TS-K) ..... Detects the toner density in the developing unit K.
12. Toner sensor K (TS-M)..... Detects the toner density in the developing unit M.
13. Toner sensor K (TS-C) ..... Detects the toner density in the developing unit C.
14. Toner sensor K (TS-Y) ..... Detects the toner density in the developing unit Y.
15. ID sensor 1 (IDS1) ..... Measures image density for color calibration.
16. ID sensor 2 (IDS2) ..... Measures image density for color calibration.

17. Developing release switch
    (DEVRSW)..... Detects separation of developing units M, C and Y.
18. Waste toner sensor (WTS)..... Detects when the waste toner box is full.
19. Envelope switch (EVSW)..... Detects the envelope mode setting.
20. Inner tray switch (ITSW) ..... Detects the opening and closing of the inner tray.
21. Toner container sensor (TCS)..... Detects the presence of the toner container.
22. Waste toner cover sensor (WTCS) ..... Detects the opening and closing of the waste toner cover.
23. Fuser thermistor (FTH) ..... Detects the heat roller temperature.
24. Outer temperature sensor (OTEMS)..... Detects the outside temperature and humidity.
25. Inner temperature sensor (ITEMS) ..... Detects the inside temperature.

(3) Motors

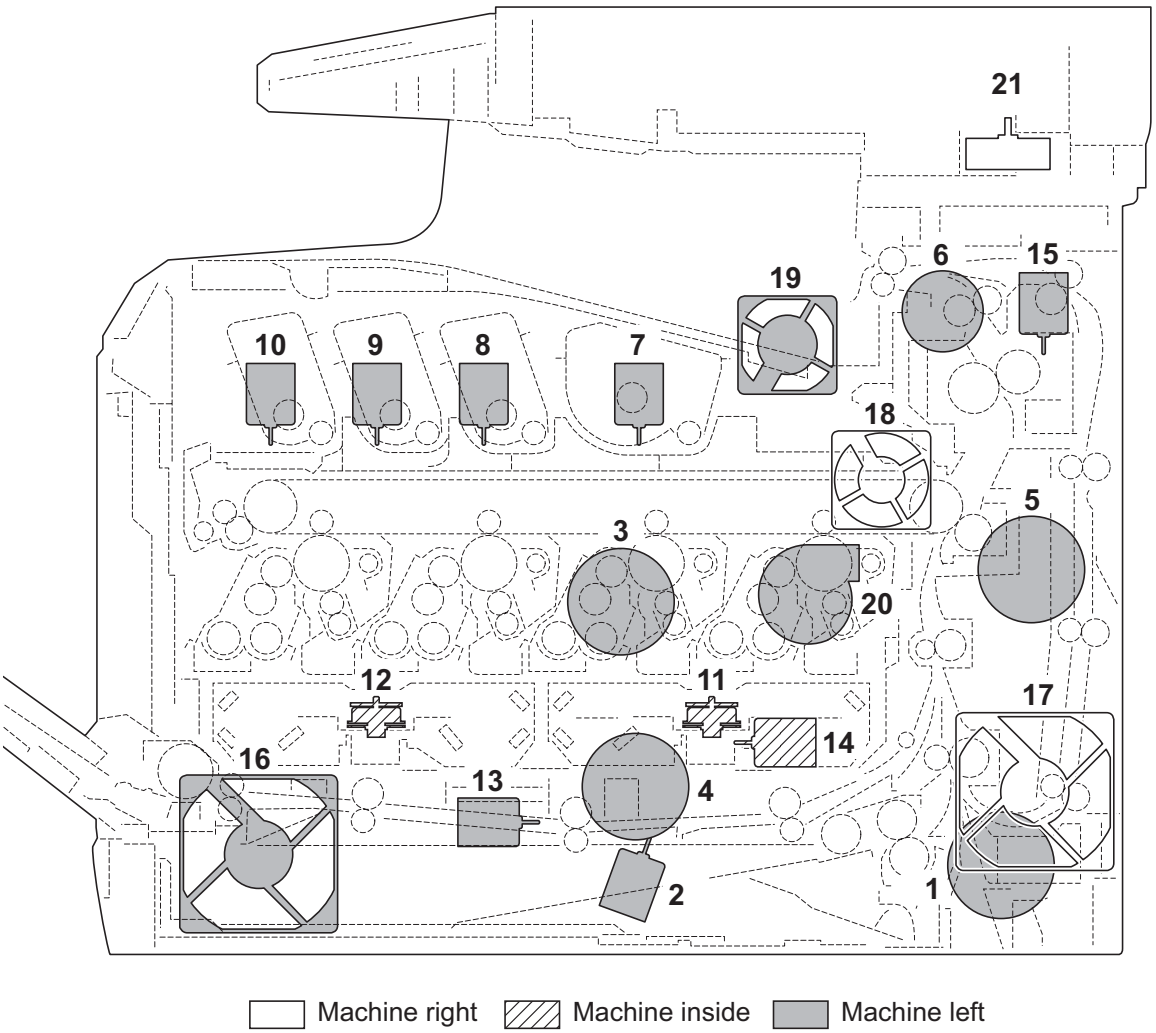

Figure 2-2-3 Motors

1. Paper feed motor (PFM) ..... Drives the paper feed section.
2. Lift motor (LM)..... Operates the bottom plate.
3. Drum motor (DRM) ..... Drives the drum unit.
4. Developing motor (DEVM)..... Drives the developing unit.
5. Fuser motor (FUM) ..... Drives the transfer section and the fuser section.
6. Duplex motor (DUM)..... Drives the duplex section.
7. Toner motor K (TM-K) ..... Replenishes toner to the developing unit K
8. Toner motor M (TM-M)..... Replenishes toner to the developing unit M
9. Toner motor C (TM-C)..... Replenishes toner to the developing unit C
10. Toner motor Y (TM-Y) ..... Replenishes toner to the developing unit Y
11. Polygon motor KM (PM-KM)..... Drives the polygon mirror KM.
12. Polygon motor CY (PM-CY)..... Drives the polygon mirror CY.
13. Developing release motor (DEVRM)..... Drives separation of developing units M, C and Y.
14. LSU cleaning motor (LSUCM) ..... Drives LSU dust shield glass cleaning system.
15. Fuser pressure release motor
    (FPRM) ..... Drives fuser pressure release.
16. Left fan motor (LFM) ..... Cools the interior of machine.
17. Right fan motor (RFM) ..... Cools the interior of machine.

18. Controller fan motor (CONFM)..... Cools the controller section.
19. Fuser fan motor (FUFM) ..... Cools the toner container section.
20. Container fan motor (CFM) ..... Cools the toner container section.
21. ISU motor (ISUM) ..... Drives the ISU.

(4) Others

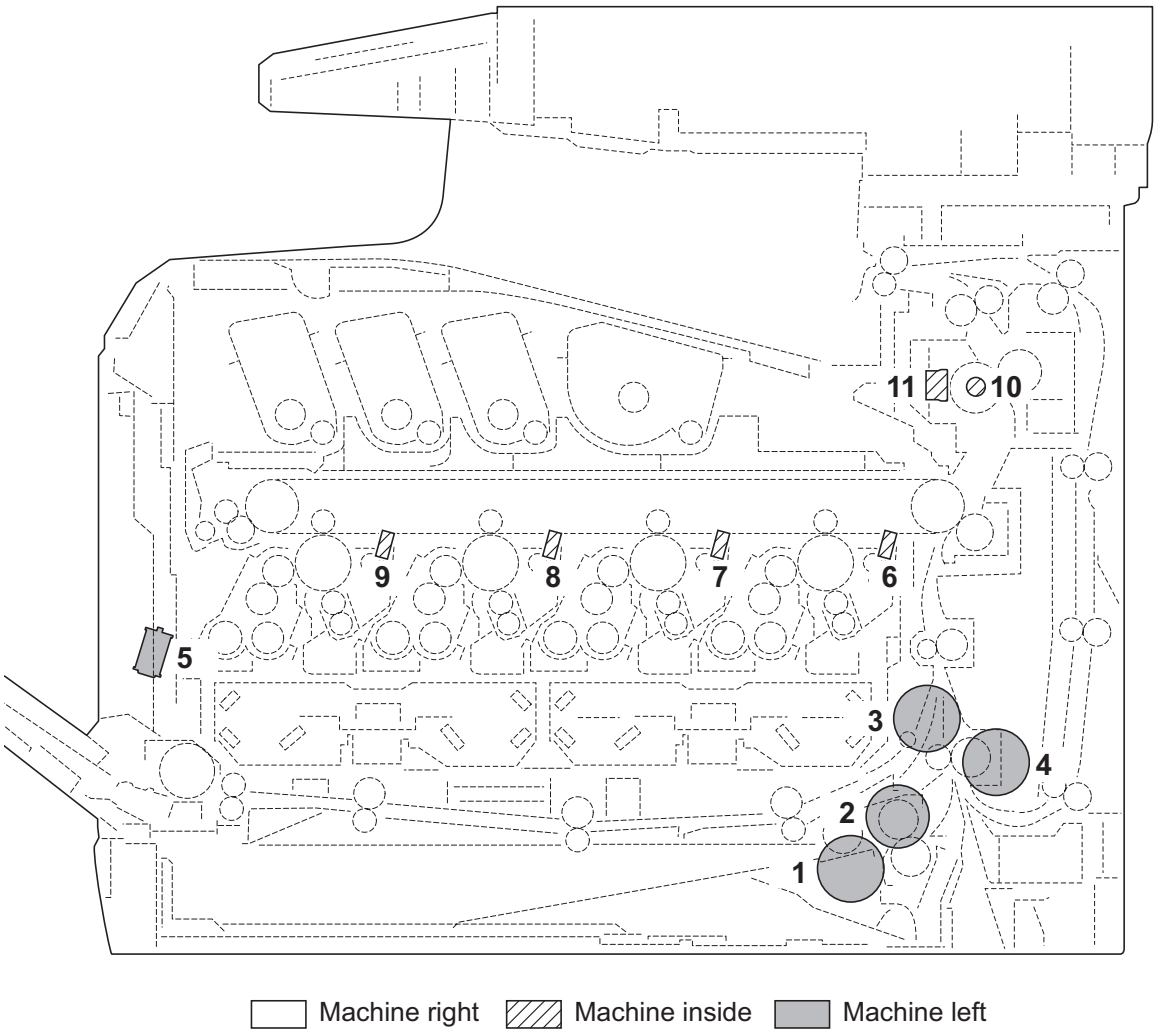

Figure 2-2-4 Others

1. Paper feed clutch (PFCL) ..... Primary paper feed from cassette.
2. MP feed clutch (MPFCL)..... Controls the drive of MP conveying section.
3. Registration clutch (RCL)..... Controls the secondary paper feed.
4. Middle clutch (MCL)..... Controls the drive of conveying section.
5. MP solenoid (MPSOL) ..... Controls the MP bottom plate.
6. Cleaning lamp K (CL-K)..... Eliminates the residual electrostatic charge on the drum (black).
7. Cleaning lamp M (CL-M)..... Eliminates the residual electrostatic charge on the drum (magenta).
8. Cleaning lamp C (CL-C)..... Eliminates the residual electrostatic charge on the drum (cyan).
9. Cleaning lamp Y (CL-Y)..... Eliminates the residual electrostatic charge on the drum (yellow).
10. Fuser heater (FH) ..... Heats the heat roller.
11. Fuser thermal cutout..... Prevents overheating of the heat roller.

(5) Document processor

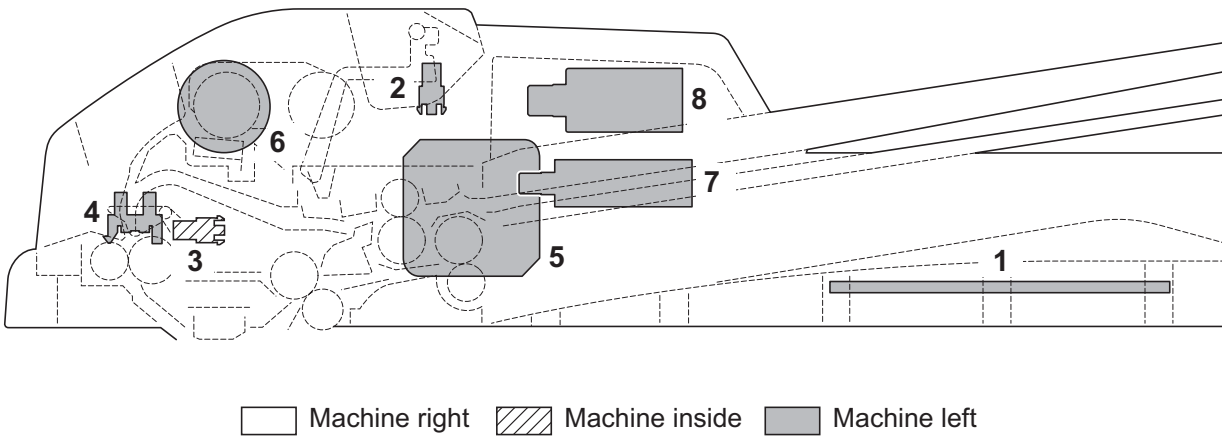

Figure 2-2-5 Document processor

1. DP drive PWB (DPDPWB ..... Consists the solenoids and clutch driver circuit and wiring relay circuit.
2. DP original sensor (DPOS) ..... Detects the presence of an original.
3. DP timing sensor (DPTS)..... Detects the original scanning timing.
4. DP open/close sensor (DPOCS)..... Detects the opening/closing of the DP.
5. DP paper feed motor (DPPFM)..... Drives the original feed section.
6. DP paper feed clutch (DPPFCL)..... Controls the drive of the DP forwarding pulley and DP feed pulley.
7. DP switchback solenoid (DPSBSOL).... Operates the switchback guide.
8. DP pressure solenoid (DPPRSOL) ..... Operates the switchback pulley.

This page is intentionally left blank.

2-3-1 Power source PWB

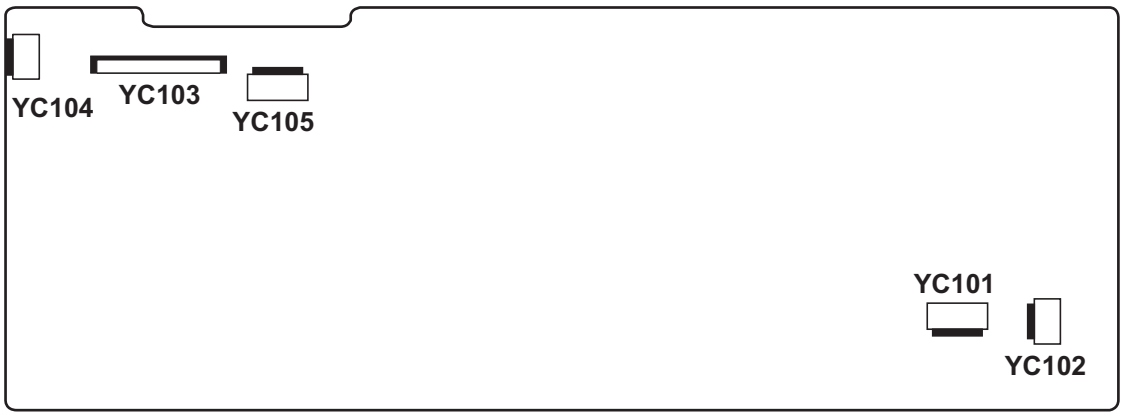

Figure 2-3-1 Power source PWB silk-screen diagram

Connector	Pin	Signal	I/O	Voltage	Description
YC101	1	LIVE	I	120 V AC 220-240 V AC	AC power input
Connected to AC inlet and main power switch	2	NEUTRAL	I	120 V AC 220-240 V AC	AC power input
YC102	1	NEUTRAL	O	120 V AC/0 V 220-240 V AC/0 V	FH: On/Off
Connected to fuser heater	2	LIVE	O	120 V AC 220-240 V AC	AC power to FH
YC103	1	+24V1	O	24 V DC	24 V DC power to RYPWB
Connected to relay PWB	2	GND	-	-	Ground
	3	GND	-	-	Ground
	4	GND	-	-	Ground
	5	GND	-	-	Ground
	6	+24V2	O	24 V DC	24 V DC power to RYPWB (via ILSW)
	7	+24V2	O	24 V DC	24 V DC power to RYPWB (via ILSW)
	8	+24V2	O	24 V DC	24 V DC power to RYPWB (via ILSW)
	9	+24V2	O	24 V DC	24 V DC power to RYPWB (via ILSW)
	10	PSSLEEPN	I	0/3.3 V DC	Sleep mode signal: On/Off
	11	ZCROSS	O	0/3.3 V DC (pulse)	Zero-cross signal
	12	RELAY	I	0/3.3 V DC	Power relay signal: On/Off
	13	HEATRE1	I	0/3.3 V DC	FH: On/Off
YC104	1	+24V1	O	24 V DC	24 V DC power to ILSW
Connected to interlock switch	2	N.C	-	-	Not used
	3	+24V2	I	24 V DC	24 V DC power from ILSW
YC105	1	+24V1	O	24 V DC	24 V DC power to MPWB
Connected to main PWB	2	GND	-	-	Ground
	3	GND	-	-	Ground
	4	+5V1	O	5 V DC	5 V DC power to MPWB

2-3-2 Engine PWB

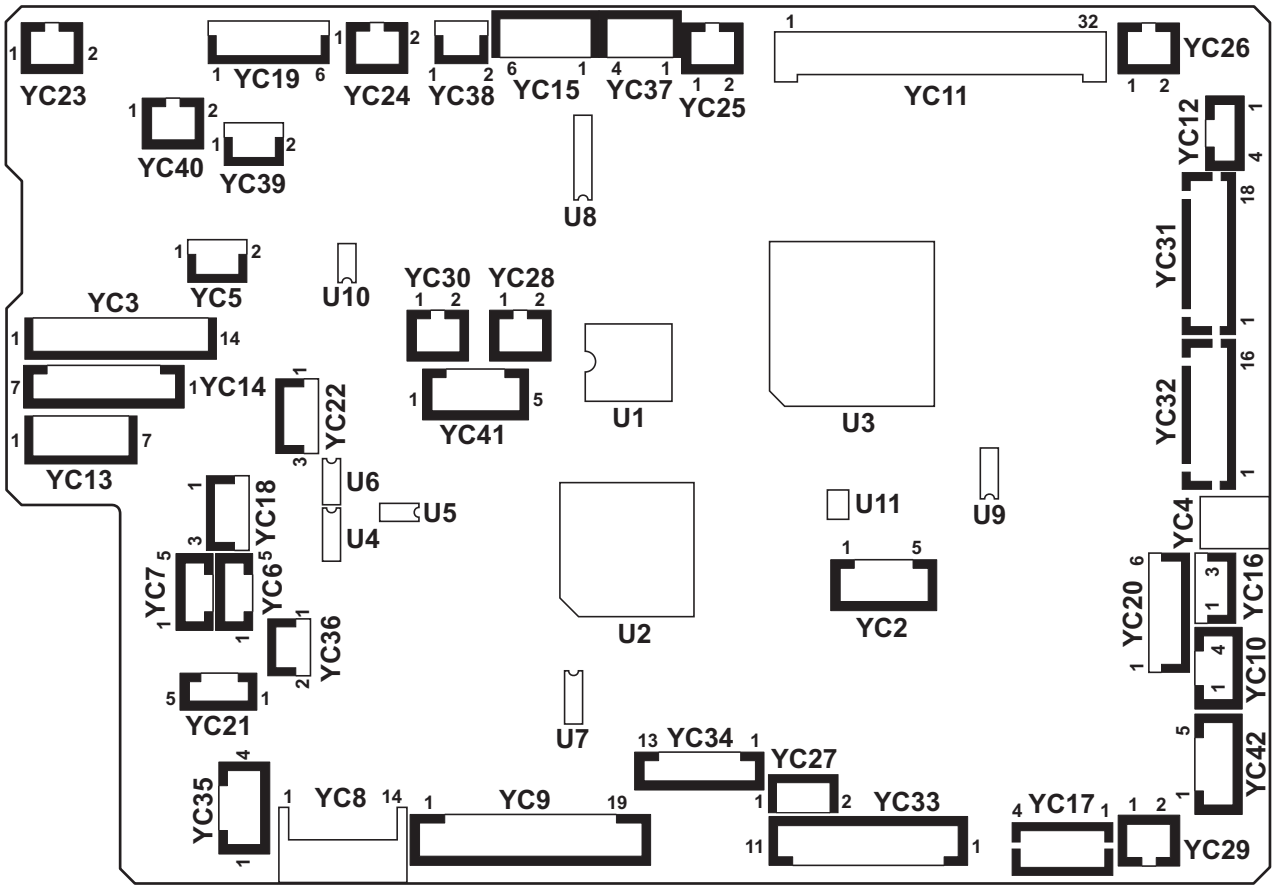

Figure 2-3-2 Engine PWB silk-screen diagram

Connector	Pin	Signal	I/O	Voltage	Description
YC3	1	MPFCLDRN	O	0/24 V DC	MPFCL: On/Off
Connected to MP feed clutch, paper feed clutch, paper feed motor, middle clutch and registration clutch	2	+24V3	O	24 V DC	24 V DC power to MPFCL
	3	FEDCLDRN	O	0/24 V DC	PFCL: On/Off
	4	+24V3	O	24 V DC	24 V DC power to PFCL
	5	N.C.	-	-	Not used
	6	FEMOTRDYN	I	0/3.3 V DC	PFM ready signal
	7	FEMOTCLK	O	0/3.3 V DC (pulse)	PFM clock signal
	8	FEMOTREN	O	0/3.3 V DC	PFM: On/Off
	9	GND	-	-	Ground
	10	+24V3	O	24 V DC	24 V DC power to PFM
	11	MIDCLDRN	O	0/24 V DC	MCL: On/Off
	12	+24V3	O	24 V DC	24 V DC power to MCL
	13	REGCLDRN	O	0/24 V DC	RCL: On/Off
	14	+24V3	O	24 V DC	24 V DC power to RCL
YC4	1	+24V3	O	24 V DC	24 V DC power to MPSOL
Connected to MP solenoid	2	MPSOLDRN	I	0/24 V DC	MPSOL: On/Off
YC6	1	VOSL	I	Analog	IDS1 detection signal
Connected to ID sensor 1	2	VOPL	I	Analog	IDS1 detection signal
	3	GND	-	-	Ground
	4	LEDREFL	O	Analog	IDS1 control signal
	5	+3.3V2	O	3.3 V DC	3.3 V DC power to IDS1
YC7	1	VOSR	I	Analog	IDS2 detection signal
Connected to ID sensor 2	2	VOPR	I	Analog	IDS2 detection signal
	3	GND	-	-	Ground
	4	LEDREFR	O	Analog	IDS2 control signal
	5	+3.3V2	O	3.3 V DC	3.3 V DC power to IDS2

Connector	Pin	Signal	I/O	Voltage	Description
YC8	1	+24V1	I	24 V DC	24 V DC power from RYPWB
Connected to relay PWB	2	GND	-	-	Ground
	3	GND	-	-	Ground
	4	GND	-	-	Ground
	5	GND	-	-	Ground
	6	+24V3	O	24 V DC	24 V DC power from RYPWB
	7	+24V3	O	24 V DC	24 V DC power from RYPWB
	8	+24V3	O	24 V DC	24 V DC power from RYPWB
	9	+24V3	O	24 V DC	24 V DC power from RYPWB
	10	GND	-	-	Ground
	11	SLEEPN	O	0/3.3 V DC	Sleep mode signal: On/Off
	12	HYPINT	O	0/3.3 V DC	Sleep return signal: On/Off
	13	I2CINT	-	-	Not used
	14	+3.3V2	I	3.3 V DC	3.3 V DC power from RYPWB
YC9	1	TCOVOPN	O	0/3.3 V DC	TTSW: On/Off
Connected to relay PWB	2	EGHOLD	I	0/3.3 V DC	Engine hold signal
	3	ZCROSS	I	0/3.3 V DC (pulse)	Zero-cross signal
	4	RELAY	O	0/3.3 V DC	Power relay signal
	5	HEATRE1	O	0/3.3 V DC	FH: On/Off
	6	(HEATRE2)	-	-	Not used
	7	VSYNC	O	0/3.3 V DC	Vertical synchronizing signal
	8	EGIRN	O	0/3.3 V DC	Engine interruption signal
	9	SBSY	O	0/3.3 V DC	Serial busy signal
	10	SDIR	O	0/3.3 V DC	Serial communication direction change signal
	11	SI	I	0/3.3 V DC (pulse)	Serial communication data signal input
	12	SO	O	0/3.3 V DC (pulse)	Serial communication data signal output
	13	SCKN	I	0/3.3 V DC (pulse)	Serial communication clock signal
	14	N.C.	-	-	Not used
	15	I2CSCL	I	0/3.3 V DC (pulse)	EEPROM clock signal
	16	GND	-	-	Ground
	17	I2CSDA	I/O	0/3.3 V DC (pulse)	EEPROM data signal
	18	MPFJAM	I	0/3.3 V DC	MPPCS: On/Off
	19	+3.3V1_MFP	O	3.3 V DC	3.3 V DC power to RYPWB

Connector	Pin	Signal	I/O	Voltage	Description
YC10	1	LEDA	O	3.3 V DC	3.3 V DC power to WTS
Connected to waste toner sensor	2	LEDK	O	0/3.3 V DC (pulse)	WTS LED emitter signal
	3	PTRE	I	Analog	WTS detection signal
	4	PTRC	O	3.3 V DC	3.3 V DC power to WTS
YC11	1	+24V3	O	24 V DC	24 V DC power to HVPWB
Connected to high voltage PWB	2	+24V3	O	24 V DC	24 V DC power to HVPWB
	3	T1CCNT	O	PWM	Primary transfer bias control voltage (Cyan)
	4	HVCLKY	O	0/3.3 V DC (pulse)	Developing bias clock signal (Yellow)
	5	T1MCNT	O	PWM	Primary transfer bias control voltage (Magenta)
	6	HVCLKC	O	0/3.3 V DC (pulse)	Developing bias clock signal (Cyan)
	7	T2CNT	O	PWM	Secondary transfer bias control voltage
	8	BCMCNT	O	PWM	Developing magnet roller bias control voltage (Cyan)
	9	CLCNT	O	PWM	Cleaning bias control voltage
	10	BKMCNT	O	PWM	Developing magnet roller bias control voltage (Black)
	11	T1YCNT	O	PWM	Primary transfer bias control voltage (Yellow)
	12	BKSCNT	O	PWM	Developing sleeve roller bias control voltage (Black)
	13	T1KCNT	O	PWM	Primary transfer bias control voltage (Black)
	14	BYSCNT	O	PWM	Developing sleeve roller bias control voltage (Yellow)
	15	MYCNT	O	PWM	Charger roller control voltage (Yellow)
	16	BMMCNT	O	PWM	Developing magnet roller bias control voltage (Magenta)
	17	MKCNT	O	PWM	Charger roller control voltage (Black)
	18	BYMCNT	O	PWM	Developing magnet roller bias control voltage (Yellow)
	19	MCCNT	O	PWM	Charger roller control voltage (Cyan)
	20	T2RREM	O	0/3.3 V DC (pulse)	Secondary transfer bias reverse signal
	21	MMCNT	O	PWM	Charger roller control voltage (Magenta)
	22	BMSCNT	O	PWM	Developing sleeve roller bias control voltage (Magenta)
	23	MISENS	I	Analog	Charger roller AC current signal
	24	BKACNT	O	PWM	Developing AC bias control voltage (Black)

Connector	Pin	Signal	I/O	Voltage	Description
YC11	25	BCACNT	O	PWM	Developing AC bias control voltage (Cyan)
Connected to high voltage PWB	26	BMACNT	O	PWM	Developing AC bias control voltage (Magenta)
	27	BYACNT	O	PWM	Developing AC bias control voltage (Yellow)
	28	HVCLKK	O	0/3.3 V DC (pulse)	Developing bias clock signal (Black)
	29	BCSCNT	O	PWM	Developing sleeve roller bias control voltage (Cyan)
	30	HVCLKM	O	0/3.3 V DC (pulse)	Developing bias clock signal (Magenta)
	31	GND	-	-	Ground
	32	GND	-	-	Ground
YC12	1	+3.3V2		3.3 V DC	3.3 V DC power to RFPWB
Connected to RFID PWB.	2	RFCLK	O	0/3.3 V DC (pulse)	RFPWB EEPROM clock signal
	3	GND	-	-	Ground
	4	RFDATA	I/O	0/3.3 V DC (pulse)	RFPWB EEPROM data signal
	5	GND	-	-	Ground
YC13	1	MOTREV (GND)	-	-	Ground
Connected to drum motor	2	MOTRDYN	I	0/3.3 V DC	DRM ready signal
	3	SPEEDSEL	O	0/3.3 V DC	DRM speed selection signal
	4	MOTCLK	O	0/3.3 V DC (pulse)	DRM clock signal
	5	MOTEN	O	0/3.3 V DC	DRM: On/Off
	6	GND	-	-	Ground
	7	+24V3	O	24 V DC	24 V DC power to DRM
YC14	1	+24V3	O	24 V DC	24 V DC power to DEVM
Connected to developing motor	2	GND	-	-	Ground
	3	DLPMOTREN	O	0/3.3 V DC	DEVM: On/Off
	4	DLPMOTCLK	O	0/3.3 V DC (pulse)	DEVM clock signal
	5	DLPMOT RDYN	I	0/3.3 V DC	DEVM ready signal
	6	MOTREV	O	0/3.3 V DC	DEVM drive switch signal
YC15	1	IMAMOT RDYN	I	0/3.3 V DC	FUM ready signal
Connected to fuser motor	2	IMAMOTCLK	O	0/3.3 V DC (pulse)	FUM clock signal
	3	IMAMOTREN	O	0/3.3 V DC	FUM: On/Off
	4	GND	-	-	Ground
	5	+24V3	O	24 V DC	24 V DC power to FUM

Connector	Pin	Signal	I/O	Voltage	Description
YC16	1	+3.3V2_LED1	O	3.3 V DC	3.3 V DC power to MPPS
Connected to MP paper sensor	2	GND	-	-	Ground
	3	MPFPAP	I	0/3.3 V DC	MPPS: On/Off
YC17	1	CAS2	I	0/3.3 V DC	CSSW (SW2): On/Off
Connected to cassette size switch	2	CAS1	I	0/3.3 V DC	CSSW (SW1): On/Off
	3	COM	-	-	Ground
	4	CAS0	I	0/3.3 V DC	CSSW (SW0): On/Off
YC18	1	+3.3V2_LED2	O	3.3 V DC	3.3 V DC power to RS
Connected to registration sensor	2	GND	-	-	Ground
	3	REGPAP	I	0/3.3 V DC	RS: On/Off
YC19	1	PDIRN	I	0/3.3 V DC	EVSW: On/Off
Connected to eject PWB	2	+3.3V2	O	3.3 V DC	3.3 V DC power to EJPWB
	3	FTHERM	I	Analog	FTH detection voltage
	4	FUSPAP	I	0/3.3 V DC	ES: On/Off
	5	NC	-	-	Not used
	6	GND	-	-	Ground
YC20	1	+3.3V2_LED3	O	3.3 V DC	3.3 V DC power to TCS
Connected to toner con-tainer sensor and waste toner cover sensor	2	GND	-	-	Ground
	3	TCONTN	I	0/3.3 V DC	TCS: On/Off
	4	+3.3V2_LED7	O	3.3 V DC	3.3 V DC power to WTCS
	5	GND	-	-	Ground
	6	WSTOPN	I	0/3.3 V DC	WTCS: On/Off
YC21	1	GND	-	-	Ground
Connected to cassette PWB	2	PAPVOL2	-	-	Not used
	3	PAPVOL1	I	0/3.3 V DC	PS: On/Off
	4	LIFTSEN	I	0/3.3 V DC	LS: On/Off
	5	+3.3V2	O	3.3 V DC	3.3 V DC power to CPWB
YC23	1	+24V3	O	24 V DC	24 V DC power to TM-K
Connected to toner motor K	2	TNMKDRN	O	0/24 V DC	TM-K: On/Off
YC24	1	+24V3	O	24 V DC	24 V DC power to TM-M
Connected to toner motor M	2	TNMMDRN	O	0/24 V DC	TM-M: On/Off

Connector	Pin	Signal	I/O	Voltage	Description
YC25	1	+24V3	O	24 V DC	24 V DC power to TM-C
Connected to toner motor C	2	TNMCDRN	O	0/24 V DC	TM-C: On/Off
YC26	1	+24V3	O	24 V DC	24 V DC power to TM-Y
Connected to toner motor Y	2	TNMYDRN	O	0/24 V DC	TM-Y: On/Off
YC27	1	LMOTDRN	O	0/24 V DC	LM: On/Off
Connected to lift motor	2	GND	-	-	Ground
YC28	1	+24V1	O	24 V DC	24 V DC power to CFM
Connected to container fan motor	2	TCONTFAN DRN	O	0/12/24 V DC	CFM: Full speed/Half speed/Off
YC29	1	+24V1	O	24 V DC	24 V DC power to LFM
Connected to left fan motor	2	LFANDRN	O	0/12/24 V DC	LFM: Full speed/Half speed/Off
YC30	1	TOPOPN	O	0/3.3 V DC	ITSW: On/Off
Connected to inner tray switch	2	GND	-	-	Ground
YC31	1	GND	-	-	Ground
Connected to laser scanner unit KM	2	NC	-	-	Not used
	3	LONBKN	O	0/3.3 V DC	APCPWB-K sample/hold signal
	4	ENBKN	O	0/3.3 V DC	APCPWB-K laser enable signal
	5	PDKN	I	0/3.3 V DC (pulse)	Horizontal synchronizing signal
	6	GND	-	-	Ground
	7	NC	-	-	Not used
	8	LONBMN	O	0/3.3 V DC	APCPWB-M sample/hold signal
	9	ENBMN	O	0/3.3 V DC	APCPWB-M laser enable signal
	10	PDMN	I	0/3.3 V DC (pulse)	Horizontal synchronizing signal
	11	LSUTHERMM	I	Analog	ITEMS detection voltage
	12	POLCLK1	O	0/3.3 V DC (pulse)	PM-KM clock signal
	13	POLRDYN1	I	0/3.3 V DC	PM-KM ready signal
	14	POLONN1	O	0/3.3 V DC	PM-KM: On/Off
	15	GND	-	-	Ground
	16	+24V3	O	24 V DC	24 V DC power to PM-KM
	17	N.C.	-	-	Not used
	18	N.C.	-	-	Not used

Connector	Pin	Signal	I/O	Voltage	Description
YC32	1	GND	-	-	Ground
Connected to laser scanner unit CY	2	NC	-	-	Not used
	3	LONBCN	O	0/3.3 V DC	APCPWB-C sample/hold signal
	4	ENBCN	O	0/3.3 V DC	APCPWB-C laser enable signal
	5	PDCN	I	0/3.3 V DC (pulse)	Horizontal synchronizing signal
	6	GND	-	-	Ground
	7	NC	-	-	Not used
	8	LONBYN	O	0/3.3 V DC	APCPWB-Y sample/hold signal
	9	ENBYN	O	0/3.3 V DC	APCPWB-Y laser enable signal
	10	PDYN	I	0/3.3 V DC (pulse)	Horizontal synchronizing signal
	11	LSUTHERMY	-	-	Not used
	12	POLCLK0	O	0/3.3 V DC (pulse)	PM-CY clock signal
	13	POLRDYN0	I	0/3.3 V DC	PM-CY ready signal
	14	POLONN0	O	0/3.3 V DC	PM-CY: On/Off
	15	GND	-	-	Ground
	16	+24V3	O	24 V DC	24 V DC power to PM-CY
YC33	1	GND	-	-	Ground
Connected to paper feeder	2	OPSCLK	O	0/3.3 V DC (pulse)	Paper feeder clock signal
	3	OPRDYN	I	0/3.3 V DC	Paper feeder ready signal
	4	OPSDI	I	0/3.3 V DC (pulse)	Paper feeder serial communication data signal input
	5	OPSDO	O	0/3.3 V DC (pulse)	Paper feeder serial communication data signal output
	6	+3.3V1	O	3.3 V DC	3.3 V DC power to paper feeder
	7	GND	-	-	Ground
	8	OPSEL0	O	0/3.3 V DC	Paper feeder selection signal
	9	OPSEL1	O	0/3.3 V DC	Paper feeder selection signal
	10	OPSEL2	O	0/3.3 V DC	Paper feeder selection signal
	11	+24V3	O	24 V DC	24 V DC power to paper feeder

Connector	Pin	Signal	I/O	Voltage	Description
YC34	1	TNSENM	I	Analog	TS-M detection voltage
Connected to drum relay PWB	2	ERASECDR	O	0/24 V DC	CL-C: On/Off
	3	TNSENK	I	Analog	TS-K detection voltage
	4	ERASEMDR	O	0/24 V DC	CL-M: On/Off
	5	DLPTHERM	I	Analog	DEVTH detection voltage
	6	ERASEKDR	O	0/24 V DC	CL-K: On/Off
	7	+3.3V2	O	3.3 V DC	3.3 V DC power to DRRPWB
	8	EECLK	O	0/3.3 V DC (pulse)	EEPROM clock signal
	9	GND	-	-	Ground
	10	EEDATA	I/O	0/3.3 V DC (pulse)	EEPROM data signal
	11	TNSENY	I	Analog	TS-Y detection voltage
	12	ERASEYDR	O	0/24 V DC	CL-Y: On/Off
	13	TNSENC	I	Analog	TS-C detection voltage
YC35	1	DLPDIRN	I	0/3.3 V DC	DEVRSW: On/Off
Connected to developing release switch and developing release motor	2	GND	-	-	Ground
	3	DLPCMOTA	O	24/0 V DC	DEVRM: Forward/Stop (Reverse)
	4	DLPCMOTB	O	24/0 V DC	DEVRM: Reverse/Stop (Forward)
YC36	1	LSUMOTA	O	24/0 V DC	LSUCM: Forward/Stop (Reverse)
Connected to LSU cleaning motor	2	LSUMOTB	O	24/0 V DC	LSUCM: Reverse/Stop (Forward)
YC37	1	STDUBN	O	0/24 V DC (pulse)	DUM drive control signal
Connected to duplex motor	2	STDUAN	O	0/24 V DC (pulse)	DUM drive control signal
	3	STDUB	O	0/24 V DC (pulse)	DUM drive control signal
	4	STDUA	O	0/24 V DC (pulse)	DUM drive control signal
YC38	1	PREMOTDRN	O	0/24 V DC	FPRM: On/Off
Connected to fuser pressure release motor	2	GND	-	-	Ground
YC40	1	+24V1	O	24 V DC	24 V DC power to FUFM
Connected to fuser fan motor	2	FUFANDRN	O	0/12/24 V DC	FUFM: Full speed/Half speed/Off

Connector	Pin	Signal	I/O	Voltage	Description
YC42	1	GND	-	-	Ground
Connected to outer temperature sensor	2	AIRTEMP	I	Analog	OTEMS detection voltage (temperature)
	3	WETCLK0	O	0/3.3 V DC (pulse)	OTEMS clock signal
	4	WETCLK1	O	0/3.3 V DC (pulse)	OTEMS clock signal
	5	AIRWETOUT	I	Analog	OTEMS detection voltage (humidity)

2-3-3 Main PWB

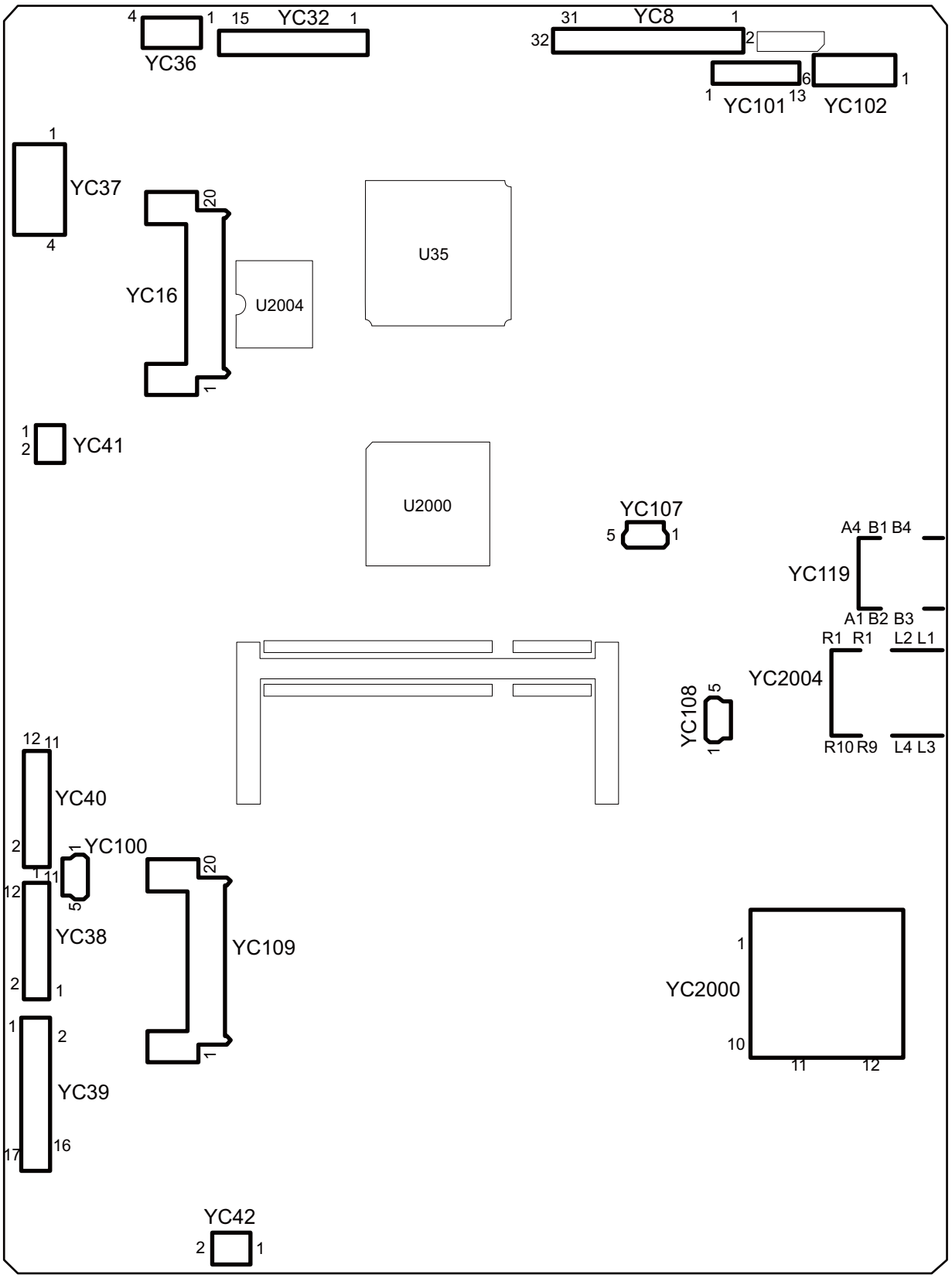

Figure 2-3-3 Main PWB silk-screen diagram

Connector	Pin	Signal	I/O	Voltage	Description
YC8	1	CCDSW	O	0/3.3 V DC	CCD color/BW change signal
Connected to CCD PWB	2	CCDSH	O	0/3.3 V DC	CCD shift gate signal
	3	CCDCLPN	O	LVDS	CCD clamp signal
	4	CCDCLPP	O	LVDS	CCD clamp signal
	5	GND	-	-	Ground
	6	CCDRSP	O	LVDS	CCD reset signal
	7	CCDRSN	O	LVDS	CCD reset signal
	8	GND	-	-	Ground
	9	CCDPH1N	O	LVDS	CCD shift register clock signal
	10	CCDPH1P	O	LVDS	CCD shift register clock signal
	11	GND	-	-	Ground
	12	CCDPH2P	O	LVDS	CCD shift register clock signal
	13	CCDPH2N	O	LVDS	CCD shift register clock signal
	14	NC	-	-	Not used
	15	+3.3VS	O	3.3 V DC	3.3 V DC power to CCDPWB
	16	HPSWN	I	0/3.3 V DC	HPS: On/Off
	17	NC	-	-	Not used
	18	+24V_LAMP	O	24 V DC	24 V DC power to CCDPWB
	19	LAMPTH	O	0/3.3 V DC	EL drive signal
	20	GND_LAMP	-	-	Ground
	21	GND	-	-	Ground
	22	GND	-	-	Ground
	23	CCDDATAB	I	Analog	CCD image output signal (B)
	24	GND	-	-	Ground
	25	CCDDATAG	I	Analog	CCD image output signal (G)
	26	GND	-	-	Ground
	27	CCDDATAR	I	Analog	CCD image output signal (R)
	28	GND	-	-	Ground
	29	GND	-	-	Ground
	30	+5V1	O	5 V DC	5 V DC power to CCDPWB
	31	NC	-	-	Not used
	32	+12VS	O	DC12V	12 V DC power to CCDPWB

Connector	Pin	Signal	I/O	Voltage	Description
YC16	1	VDD5	O	3.3 V DC	3.3 V DC power to FCPWB
Connected to Fax control PWB	2	GND	-	-	Ground
	3	RESETN	I	0/3.3 V DC	Reset signal
	4	VDD5_CUT	O	3.3 V DC	3.3 V DC power to FCPWB
	5	GND	-	-	Ground
	6	WAKEUP	O	0/3.3 V DC	Control signal
	7	AUDIO	I	Analog	Audio signal
	8	RESERVE	-	-	-
	9	RESERVE	-	-	-
	10	RESERVE	-	-	-
	11	GND	-	-	Ground
	12	RESERVE	-	-	-
	13	RESERVE	-	-	-
	14	GND	-	-	Ground
	15	RESERVE	-	-	-
	16	RESERVE	-	-	-
	17	GND	-	-	Ground
	18	USB_DP	I/O	-	USB data signal
	19	USB_DN	I/O	-	USB data signal
	20	VBUS	O	3.3 V DC	3.3 V DC power to FCPWB
YC32	1	FEEDCL	O	0/24 V DC	DPPFCL: On/Off
Connected to DP drive PWB	2	REVSOL	O	0/24 V DC	DPSBSOL: On/Off
	3	PRESOLN	O	0/24 V DC	DPPRSOL: On (Press)/Off
	4	RELSOLN	O	0/24 V DC	DPPRSOL: On (Release)/Off
	5	DPDETN	I	0/3.3 V DC	DP set signal
	6	OPSWN	I	0/3.3 V DC	DPOCS: On/Off
	7	ORGSWN	I	0/3.3 V DC	DPOS: On/Off
	8	TIMSWN	I	0/3.3 V DC	DPTS: On/Off
	9	GND	-	-	Ground
	10	+3.3V2	O	3.3 V DC	3.3 V DC power to DPDPWB
	11	GND	-	-	Ground
	12	+24V2	O	24 V DC	24 V DC power to PDPWB
	13	MOTB2	O	0/24 V DC (pulse)	DPPFM drive control signal
	14	MOTA2	O	0/24 V DC (pulse)	DPPFM drive control signal
	15	MOTB1	O	0/24 V DC (pulse)	DPPFM drive control signal
	16	MOTA1	O	0/24 V DC (pulse)	DPPFM drive control signal

Connector	Pin	Signal	I/O	Voltage	Description
YC36	1	SCMOTB2	O	0/24 V DC (pulse)	ISUM drive control signal
Connected to ISU motor	2	SCMOTA1	O	0/24 V DC (pulse)	ISUM drive control signal
	3	SCMOTB1	O	0/24 V DC (pulse)	ISUM drive control signal
	4	SCMOTA2	O	0/24 V DC (pulse)	ISUM drive control signal
YC37	1	+24V1	I	24 V DC	24 V DC power from PSPWB
Connected to power source PWB	2	GND	-	-	Ground
	3	GND	-	-	Ground
	4	+5V1	I	5 V DC	5 V DC power from PSPWB
YC38	1	GND	-	-	Ground
Connected to laser scanner unit KM	2	VREFM	O	Analog	APCPWB-M Laser power reference voltage
	3	+3.3V3	O	3.3 V DC	3.3 V DC power to APCPWB-M
	4	PDMN	I	0/3.3 V DC (pulse)	Horizontal synchronizing signal
	5	VDOMP	O	LVDS	APCPWB-M video data signal (+)
	6	VDOMN	O	LVDS	APCPWB-M video data signal (-)
	7	GND	-	-	Ground
	8	VREFK	O	Analog	APCPWB-K Laser power reference voltage
	9	+3.3V3	O	3.3 V DC	3.3 V DC power to APCPWB-K
	10	PDKN	I	0/3.3 V DC (pulse)	Horizontal synchronizing signal
	11	VDOKP	O	LVDS	APCPWB-K video data signal (+)
	12	VDOKN	O	LVDS	APCPWB-K video data signal (-)
YC39	1	+3.3V1_MFP	O	3.3 V DC	3.3 V DC power to RYPWB
Connected to relay PWB	2	I2CSDA	I/O	0/3.3 V DC (pulse)	EEPROM data signal
	3	GND	-	-	Ground
	4	I2CSCL	O	0/3.3 V DC (pulse)	EEPROM clock signal
	5	SCKN	O	0/3.3 V DC (pulse)	Serial communication clock signal
	6	SO	I	0/3.3 V DC (pulse)	Serial communication data signal input
	7	SI	O	0/3.3 V DC (pulse)	Serial communication data signal output
	8	SDIR	I	0/3.3 V DC	Serial communication direction change signal
	9	SBSY	I	0/3.3 V DC	Serial busy signal
	10	EGIRN	I	0/3.3 V DC	Engine interruption signal
	11	VSYNC	I	0/3.3 V DC (pulse)	Vertical synchronizing signal
	12	+3.3V2	O	3.3 V DC	3.3 V DC power to RYPWB
	13	GND	-	-	Ground
	14	EGHOLD	O	0/3.3 V DC	Engine hold signal
	15	I2CINT	-	-	Not used

Connector	Pin	Signal	I/O	Voltage	Description
YC39	16	HYPINT	I	0/3.3 V DC	Sleep return signal: On/Off
Connected to relay PWB	17	PSSLEEPN	O	0/3.3 V DC	Sleep mode signal: On/Off
YC40	1	GND	-	-	Ground
Connected to laser scanner unit CY	2	VREFY	O	Analog	APCPWB-Y Laser power reference voltage
	3	+3.3V3	O	3.3 V DC	3.3 V DC power to APCPWB-Y
	4	PDYN	I	0/3.3 V DC (pulse)	Horizontal synchronizing signal
	5	VDOYP	O	LVDS	APCPWB-Y video data signal (+)
	6	VDOYN	O	LVDS	APCPWB-Y video data signal (-)
	7	GND	-	-	Ground
	8	VREFC	O	Analog	APCPWB-C Laser power reference voltage
	9	+3.3V3	O	3.3 V DC	3.3 V DC power to APCPWB-C
	10	PDCN	I	0/3.3 V DC (pulse)	Horizontal synchronizing signal
	11	VDOCP	O	LVDS	APCPWB-C video data signal (+)
	12	VDOCN	O	LVDS	APCPWB-C video data signal (-)
YC41	1	+24V1	O	24 V DC	24 V DC power to CONFM
Connected to controller fan motor	2	CONTFAN DRN	O	0/12/24 V DC	CONFM: Full speed/Half speed/Off
YC42	1	+24V1	O	24 V DC	24 V DC power to RFM
Connected to right fan motor	2	RFANDRN	O	0/12/24 V DC	RFM: Full speed/Half speed/Off
YC100	1	VBUS	O	5 V DC	5 V DC power to OPPWB
Connected to operation panel PWB.	2	DATA+	I/O	-	USB data signal
	3	DATA-	I/O	-	USB data signal
	4	NC(ID)	-	-	Not used
	5	GND	-	-	Ground

Connector	Pin	Signal	I/O	Voltage	Description
YC101	1	GND	-	-	Ground
Connected to operation panel PWB.	2	PANEL_STATUS	I	0/3.3 V DC	Operation panel status signal
	3	INT_POWERKEY_N	I	0/3.3 V DC	Power key: On/Off
	4	PANEL_RESET	O	0/3.3 V DC	Reset signal
	5	AUDIO	O	Analog	Audio output signal
	6	LIGHTOFF_POWERON	O	0/3.3 V DC	Sleep return signal
	7	SHUTDOWN	O	0/3.3 V DC	24 V down signal
	8	LED_PROCESSING_N	O	0/3.3 V DC	Processing LED control signal
	9	LED_ATTENSION_N	O	0/3.3 V DC	Attention LED control signal
	10	LED_MEMORY_N	O	0/3.3 V DC	Memory LED control signal
	11	SUSPEND_POWER	O	3.3 V DC	3.3 V DC power to OPWB1
	12	ENERGY_SAVE	O	0/3.3 V DC	Energy save signal
	13	BEEP_POWERON	O	0/3.3 V DC	Sleep return signal
YC102	1	+5V2	O	5 V DC	5 V DC power to OPPWB
Connected to operation panel PWB.	2	+5V2	O	5 V DC	5 V DC power to OPPWB
	3	+5V2	O	5 V DC	5 V DC power to OPPWB
	4	GND	-	-	Ground
	5	GND	-	-	Ground
	6	GND	-	-	Ground
YC107	1	VBUS	O	5 V DC	5 V DC power output
Connected to USB	2	DATA-	I/O	-	USB data signal
	3	DATA+	I/O	-	USB data signal
	4	NC	-	-	Not used
	5	GND	-	-	Ground

Connector	Pin	Signal	I/O	Voltage	Description
YC108	1	VBUS	O	5 V DC	5 V DC power to ICCR
Connected to IC card reader.	2	DATA-	I/O	-	USB data signal
	3	DATA+	I/O	-	USB data signal
	4	NC(ID)	-	-	Not used
	5	GND	-	-	Ground
YC109	1	VDD5	O	3.3 V DC	3.3 V DC power
Connected to e-KUIO slot	2	GND	-	-	Ground
	3	RESETN	I	0/3.3 V DC	Reset signal
	4	VDD5_CUT	O	3.3 V DC	3.3 V DC power
	5	GND	-	-	Ground
	6	WAKEUP	O	0/3.3 V DC	Control signal
	7	AUDIO	I	Analog	Audio signal
	8	RESERVE	-	-	-
	9	RESERVE	-	-	-
	10	RESERVE	-	-	-
	11	GND	-	-	Ground
	12	RESERVE	-	-	-
	13	RESERVE	-	-	-
	14	GND	-	-	Ground
	15	RESERVE	-	-	-
	16	RESERVE	-	-	-
	17	GND	-	-	Ground
	18	USB_DP	I/O	-	USB data signal
	19	USB_DN	I/O	-	USB data signal
	20	VBUS	O	3.3 V DC	3.3 V DC power

Connector	Pin	Signal	I/O	Voltage	Description
YC119	1	VBUS	I	5 V DC	5 V DC poweroutput
Connected to USB device	2	D-	-	-	USB data signal
	3	D+	-	-	USB data signal
	4	GND	-	-	Ground
YC2000	1	CD/DAT3	I/O	0/3.3 V DC (pulse)	Data3/Card detection signal
Connected to SD card	2	CMD	I/O	0/3.3 V DC	Command signal
	3	GND	-	-	Ground
	4	VDD	-	0/3.3 V DC	VDD signal
	5	CLK	-	0/3.3 V DC	Clock signal
	6	GND	-	-	Ground
	7	DAT0	I/O	0/3.3 V DC (pulse)	Data0
	8	DAT1	I/O	0/3.3 V DC (pulse)	Data1
	9	DAT2	I/O	0/3.3 V DC (pulse)	Data2
	10	CD	I	0/3.3 V DC	Card detection signal
	11	COMMON	-	-	Ground
	12	WP	I	0/3.3 V DC	Write protection signal
YC2004	1	TC1+	O	0/3.3 V DC (pulse)	Transmission data
Connected to ethernet	2	TD1-	O	0/3.3 V DC (pulse)	Transmission data
	3	TD2+	O	0/3.3 V DC (pulse)	Transmission data
	4	RD2-	O	0/3.3 V DC (pulse)	Transmission data
	5	CT1	O	3.3 V DC	3.3 V DC power output
	6	CT2	O	3.3 V DC	3.3 V DC power output
	7	TD3+	O	0/3.3 V DC (pulse)	Transmission data
	8	TD3-	O	0/3.3 V DC (pulse)	Transmission data
	9	TD4+	O	0/3.3 V DC (pulse)	Transmission data
	10	TD4-	O	0/3.3 V DC (pulse)	Transmission data
	11	GRLED-A	O	0/3.3 V DC	LED emitter signal
	12	GRLED-K	O	0/3.3 V DC	LED emitter signal
	13	YWLED-A	O	0/3.3 V DC	LED emitter signal
	14	YWLED-K	O	0/3.3 V DC	LED emitter signal

2-3-4 Drum relay PWB

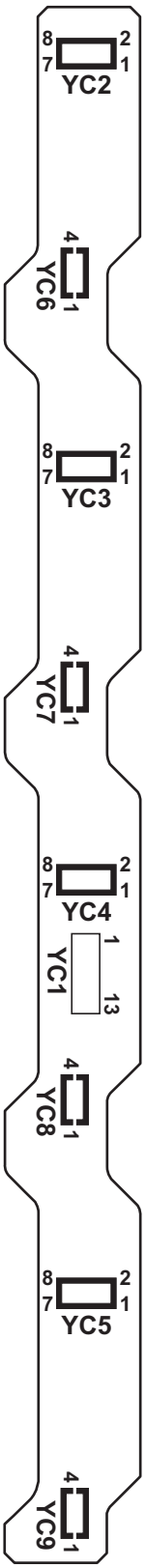

Figure 2-3-4 Drum relay PWB silk-screen diagram

Connector	Pin	Signal	I/O	Voltage	Description
YC1	1	TNSENM	O	Analog	TS-M detection voltage
Connected to engine PWB	2	ERASECDR	I	0/24 V DC	CL-C: On/Off
	3	TNSENK	O	Analog	TS-K detection voltage
	4	ERASEMDR	I	0/24 V DC	CL-M: On/Off
	5	DLPTHERM	O	Analog	DEVTH detection voltage
	6	ERASEKDR	I	0/24 V DC	CL-K: On/Off
	7	+3.3V2	I	3.3 V DC	3.3 V DC power from EPWB
	8	EECLK	I	0/3.3 V DC (pulse)	EEPROM clock signal
	9	GND	-	-	Ground
	10	EEDATA	I/O	0/3.3 V DC (pulse)	EEPROM data signal
	11	TNSENY	O	Analog	TS-Y detection voltage
	12	ERASEYDR	I	0/24 V DC	CL-Y: On/Off
	13	TNSENC	O	Analog	TS-C detection voltage
YC2	1	GND	-	-	Ground
Connected to drum PWB K	2	EECLK	O	0/3.3 V DC (pulse)	EEPROM clock signal
	3	ERASEKDR	O	0/24 V DC	CL-K: On/Off
	4	EEDATA	I/O	0/3.3 V DC (pulse)	EEPROM data signal
	5	N.C.	-	-	Not used
	6	+3.3V2	O	3.3 V DC	3.3 V DC power to DRPWB-K
	7	DA0	-	-	Not used
	8	DA1	-	-	Not used
YC3	1	GND	-	-	Ground
Connected to drum PWB M	2	EECLK	O	0/3.3 V DC (pulse)	EEPROM clock signal
	3	ERASEMDR	O	0/24 V DC	CL-M: On/Off
	4	EEDATA	I/O	0/3.3 V DC (pulse)	EEPROM data signal
	5	N.C.	-	-	Not used
	6	+3.3V2	O	3.3 V DC	3.3 V DC power to DRPWB-M
	7	DA0	-	-	Ground
	8	DA1	-	-	Not used
YC4	1	GND	-	-	Ground
Connected to drum PWB C	2	EECLK	O	0/3.3 V DC (pulse)	EEPROM clock signal
	3	ERASECDR	O	0/24 V DC	CL-C: On/Off
	4	EEDATA	I/O	0/3.3 V DC (pulse)	EEPROM data signal
	5	N.C.	-	-	Not used
	6	+3.3V2	O	3.3 V DC	3.3 V DC power to DRPWB-C
	7	DA0	-	-	Not used
	8	DA1	-	-	Ground

Connector	Pin	Signal	I/O	Voltage	Description
YC5	1	GND	-	-	Ground
Connected to drum PWB Y	2	EECLK	O	0/3.3 V DC (pulse)	EEPROM clock signal
	3	ERASEYDR	O	0/24 V DC	CL-Y: On/Off
	4	EEDATA	I/O	0/3.3 V DC (pulse)	EEPROM data signal
	5	N.C.	-	-	Not used
	6	+3.3V2	O	3.3 V DC	3.3 V DC power to DRPWB-Y
	7	DA0	-	-	Ground
	8	DA1	-	-	Ground
YC6	1	GND	-	-	Ground
Connected to developing PWB K	2	TNSENK	I	Analog	TS-K detection voltage
	3	+3.3V2	O	3.3 V DC	3.3 V DC power to DEVPWB-K
	4	DLPTHERM	I	Analog	DEVTH detection voltage
YC7	1	GND	-	-	Ground
Connected to developing PWB M	2	TNSENM	I	Analog	TS-M detection voltage
	3	+3.3V2	O	3.3 V DC	3.3 V DC power to DEVPWB-M
	4	N.C.	-	-	Not used
YC10	1	GND	-	-	Ground
Connected to developing PWB C	2	TNSENC	I	Analog	TS-C detection voltage
	3	+3.3V2	O	3.3 V DC	3.3 V DC power to DEVPWB-C
	4	N.C.	-	-	Not used
YC13	1	GND	-	-	Ground
Connected to developing PWB Y	2	TNSENY	I	Analog	TS-Y detection voltage
	3	+3.3V2	O	3.3 V DC	3.3 V DC power to DEVPWB-Y
	4	N.C.	-	-	Not used

2-3-5 DP drive PWB

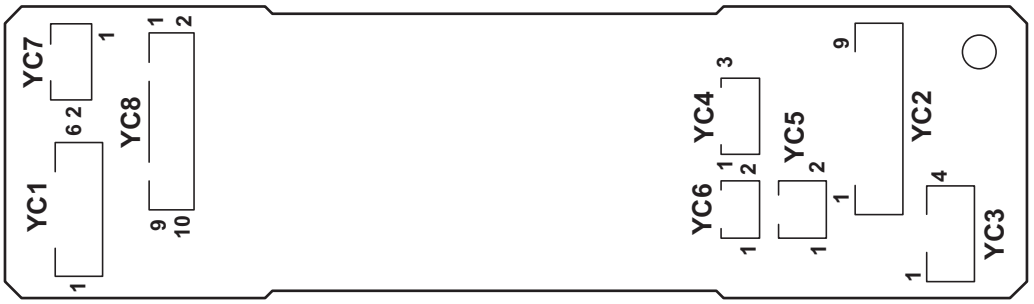

Figure 2-3-5 DP drive PWB silk-screen diagram

Connector	Pin	Signal	I/O	Voltage	Description
YC1	1	MOTA1	I	0/24 V DC (pulse)	DPPFM drive control signal
Connected to main PWB	2	MOTB1	I	0/24 V DC (pulse)	DPPFM drive control signal
	3	MOTA2	I	0/24 V DC (pulse)	DPPFM drive control signal
	4	MOTB2	I	0/24 V DC (pulse)	DPPFM drive control signal
	5	+24V2	I	24 V DC	24 V DC power from MPWB
	6	GND	-	-	Ground
YC2	1	+3.3V2	O	3.3 V DC	3.3 V DC power to DPOCS
Connected to DP open/ close sensor, DP original sensor and DP timing sensor	2	GND	-	-	Ground
	3	OPSWN	I	0/3.3 V DC	DPOCS: On/Off
	4	+3.3V2	O	3.3 V DC	3.3 V DC power to DPOS
	5	GND	-	-	Ground
	6	ORGSWN	I	0/3.3 V DC	DPOS: On/Off
	7	+3.3V2	O	3.3 V DC	3.3 V DC power to DPTS
	8	GND	-	-	Ground
	9	TIMSWN	I	0/3.3 V DC	DPTS: On/Off
YC3	1	DPMOT1A	O	0/24 V DC (pulse)	DPPFM drive control signal
Connected to DP paper feed motor	2	DPMOT2A	O	0/24 V DC (pulse)	DPPFM drive control signal
	3	DPMOT1B	O	0/24 V DC (pulse)	DPPFM drive control signal
	4	DPMOT2B	O	0/24 V DC (pulse)	DPPFM drive control signal
YC4	1	+24V2	O	24 V DC	24 V DC power to DPPRSOL
Connected to DP pressure solenoid	2	PRESOLN	O	0/24 V DC	DPPRSOL: On (Press)/Off
	3	RELSOLN	O	0/24 V DC	DPPRSOL: On (Release)/Off
YC5	1	+24V2	O	24 V DC	24 V DC power to DPSBSOL
Connected to DP switch-back solenoid	2	REVSOL	O	0/24 V DC	DPSBSOL: On/Off
YC6	1	+24V2	O	24 V DC	24 V DC power to DPPFCL
Connected to DP paper feed clutch	2	FEEDCL	O	0/24 V DC	DPPFCL: On/Off

Connector	Pin	Signal	I/O	Voltage	Description
YC8	1	+3.3V2	I	3.3 V DC	3.3 V DC power from MPWB
Connected to main PWB	2	GND	-	-	Ground
	3	TIMSWN	O	0/3.3 V DC	DPTS: On/Off
	4	ORGSWN	O	0/3.3 V DC	DPOS: On/Off
	5	OPSWN	O	0/3.3 V DC	DPOCS: On/Off
	6	DPDETN	O	0/3.3 V DC	DP set signal
	7	RELSOLN	I	0/24 V DC	DPPRSOL: On (Release)/Off
	8	PRESOLN	I	0/24 V DC	DPPRSOL: On (Press)/Off
	9	REVSOL	I	0/24 V DC	DPSBSOL: On/Off
	10	FEEDCL	I	0/24 V DC	DPPFCL: On/Off

2-4-1 Appendixes

(1) Maintenance kits

Maintenance part name		Parts No.	Alternative part No.
Name used in service	Name used in parts list		
MK-592/Maintenance kit (200,000 pages)	MK-592/MAINTENANCE KIT	1702KV7US0	072KV7US
Developing unit K	DV-560 US (K)	-	-
Developing unit M	DV-560 US (M)	-	-
Developing unit C	DV-560 US (C)	-	-
Developing unit Y	DV-560 US (Y)	-	-
Drum unit	DK-590	-	-
Intermediate transfer unit	TR-590	-	-
Fuser unit	FK-590(U)	-	-
Retard roller unit	PARTS HOLDER RETARD ASSY SP	-	-
Paper feed roller unit	PARTS HOLDER FEED ASSY SP	-	-
MP paper feed roller	ROLLER M/P ASSY	-	-
MK-590/Maintenance kit (200,000 pages)	MK-590/MAINTENANCE KIT	1702KV8NL0	072KV8NL
Developing unit K	DV-560(K)	-	-
Developing unit M	DV-560(M)	-	-
Developing unit C	DV-560(C)	-	-
Developing unit Y	DV-560(Y)	-	-
Drum unit	DK-590	-	-
Intermediate transfer unit	TR-590	-	-
Fuser unit	FK-590(E)	-	-
Retard roller unit	PARTS HOLDER RETARD ASSY SP	-	-
Paper feed roller unit	PARTS HOLDER FEED ASSY SP	-	-
MP paper feed roller	ROLLER M/P ASSY	-	-

(2) Repetitive defects gauge

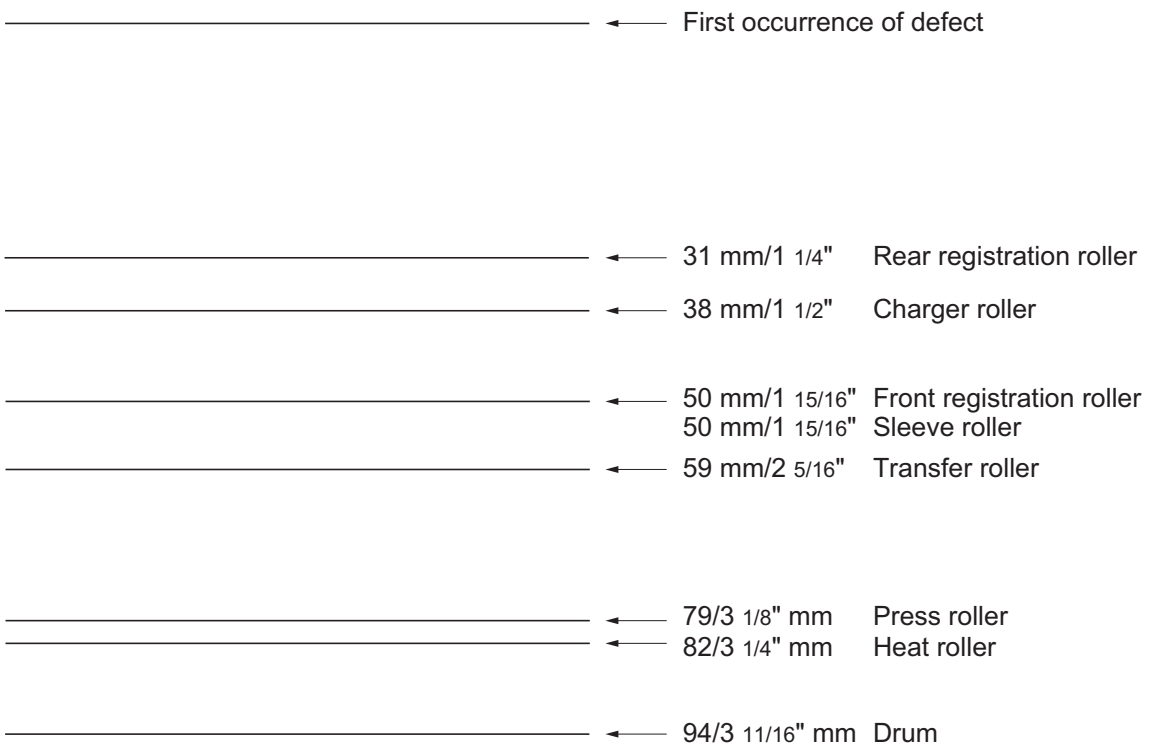

* : The repetitive marks interval may vary depending on operating conditions.

(3) Firmware environment commands

The printer maintains a number of printing parameters in its memory. There parameters may be changed permanently with the FRPO (Firmware RePrOgram) commands.
This section provides information on how to use the FRPO command and its parameters using examples.

Using FRPO commands for reprogramming firmware

The current settings of the FRPO parameters are listed as optional values on the service status page.

Note: Before changing any FRPO parameter, print out a service status page, so you will know the parameter values before the changes are made. To return FRPO parameters to their factory default values, send the FRPO INIT (FRPO-INITialize) command.(!R! FRPO INIT; EXIT;)

The FRPO command is sent to the printer in the following sequence:
!R! FRPO parameter, value; EXIT;
Example: Changing emulation mode to PCL6
!R! FRPO P1, 6; EXIT;

FRPO parameters

Item	FRPO	Setting values	Factory setting
Default pattern resolution	B8	0: 300 dpi 1: 600 dpi	0
Page orientation	C1	0: Portrait 1: Landscape	0
Default font No. *	C2 C3 C5	Middle two digits of power-up font Last two digits of power-up font First two digits of power-up font	0 0 0
PCL font switch	C8	0: HP compatibility mode 32: Conventional compatibility mode	0
Total host buffer size	H8	0 to 99 in units of the size defined by FRPO S5	5
Form feed time-out value	H9	Value in units of 5 seconds (1 to 99)	6
Duplex mode	N4	0: Off 1: Long edge binding 2: Short edge binding	0
Sleep timer time-out time	N5	Value in units of 1 minute (1 to 240)	1
Ecoprint level	N6	0: Off 2: On	0

Item	FRPO	Setting values	Factory setting
Default emulation mode	P1	6: PCL 6 9: KPDL	120V: 9 220-240V: 6
Carriage-return action	P2	0: Ignores 1: Carriage-return 2: Carriage-return + linefeed	1
Linefeed action	P3	0: Ignores 1: Linefeed 2: Linefeed + carriage-return	1
Automatic emulation switching	P4	0: AES disabled 1: AES enabled	120V: 1 220-240V: 0
Automatic emulation switching trigger	P7	0: Page eject commands 1: None 2: Page eject and prescribe EXIT commands 3: Prescribe EXIT commands 4: Formfeed (^L) commands 6: Pescribe EXIT and formfeed commands 10: Page eject commands; if AES fails, resolves to KPDL	120V: 11 220-240V: 10
Command recognition character	P9	ASCII code of 33 to 126	82 (R)
Default paper size	R2	0: Size of the default paper cassette (See R4.) 1: Envelope Monarch 2: Envelope #10 3: Envelope DL 4: Envelope C5 5: Executive 6: Letter 7: Legal 8: ISO A4 9: JIS B5 13: ISO A5 14: ISO A6 15: JIS B6 16: Envelope #9 17: Envelope #6-3/4 18: ISO B5 19: Custom 31: Postcard 32: Reply-paid postcard 33: Oficio II 40: 16K 50: Statement 51: Folio 52: Youkei 2 53: Youkei 4	0
Default cassette	R4	0: MP tray 1: Cassette 1 2: Cassette 2 3: Cassette 3	1

Item	FRPO	Setting values	Factory setting
MP tray paper size	R7	0: Maximum paper size Same as the R2 values except: 0	120V: 6 220-240V: 8
A4/letter equation	S4	0: Off 1: On	1
Host buffer size	S5	0: 10 KB 1: 100 KB 2: 1024 KB	1
RAM disk capacity	S6	0 to 1024 MB	400
RAM disk	S7	0: Disabled 1: Enabled	0
Wide A4	T6	0: Off 1: On	0
Line spacing *	U0 U1	Lines per inch (integer value) Lines per inch (decimal value)	6 0
Character spacing *	U2 U3	Characters per inch (integer value) Characters per inch (decimal value)	10 0
Country code	U6	0: US-ASCII 1: France 2: Germany 3: UK 4: Denmark 5: Sweden 6: Italy 7: Spain 8: Japan 9: US Legal 10: IBM PC-850 (Multilingual) 11: IBM PC-860 (Portuguese) 12: IBM PC-863 (Canadian French) 13: IBM PC-865 (Norwegian) 14: Norway 15: Denmark 2 16: Spain 2 17: Latin America 50 - 99: HP PCL symbol set coding	41
Code set at power up in daisywheel emulation	U7	0: Same as the default emulation mode (P1) 1: IBM 6: IBM PC-8 7 - 99: HP PCL symbol set coding	53
Font pitch for fixedpitch scalable font *	U8 U9	Default font pitch (integer value) Default font pitch (decimal value)	10 0
Font height for the default scalable font *	V0	Integer value in 100 points: 0 to 9	0
	V1	Integer value in points: 0 to 99	12
	V2	decimal value in 1/100 points: 0, 25, 50, 75	0

Item	FRPO	Setting values	Factory setting
Default scalable font *	V3	Name of typeface of up to 32 characters, enclosed with single or double quotation marks	Courier
Default weight (courier and letter Gothic)	V9	0: Courier = darkness Letter Gothic = darkness 1: Courier = regular Letter Gothic = darkness 4: Courier = darkness Letter Gothic = regular 5: Courier = regular Letter Gothic = regular	5
Color mode	W1	0: Black & white 1: Color	1
Gloss mode	W6	0: Low (normal) 1: High	0
Paper type for the MP tray	X0	1: Plain 2: Transparency 3: Preprinted 4: Label 5: Bond 6: Recycle 7: Vellum 9: Letterhead 10: Color 11: Prepunched 12: Envelope 13: Cardstock 14: Coated 16: Thick 17: High quality 21 to 28: Custom1 to 8	1
Paper type for cassettes 1	X1	1: Plain 3: Preprinted 5: Bond 6: Recycled 7: Vellum 9: Letterhead 10: Color 11: Prepunched 16: Thick 17: High quality 21 to 28: Custom1 to 8	1

Item	FRPO	Setting values	Factory setting
Paper type for cassettes 2 and 3	X2 X3	Paper feeder (Normal) 1: Plain 3: Preprinted 5: Bond 6: Recycled 9: Letterhead 10: Color 11: Prepunched 17: High quality 21 to 28: Custom1 to 8 Multi purpose feeder 1: Plain 3: Preprinted 4: Label 5: Bond 6: Recycle 7: Vellum 9: Letterhead 10: Color 11: Prepunched 12: Envelope 13: Cardstock 14: Coated 16: Thick 17: High quality 21 to 28: Custom1 to 8	1
PCL paper source	X9	0: Paper selection depending on an escape sequence compatible with HP-LJ5Si. 2: Paper selection depending on an escape sequence compatible with HP-LJ8000.	0
Automatic continue for ‘Press GO’	Y0	0: Off 1: On	0
Automatic continue timer	Y1	Value in units of 5 seconds (1 to 99)	6 (30 s)
Error message for device error	Y3	0: Not detect 127: Detect	127
Duplex operation for specified paper type (Prepunched, Preprintedand Letterhead)	Y4	0: Off 1: On	0

Item	FRPO	Setting values	Factory setting
Default operation for PDF direct printing	Y5	0: Enlarges or reduces the image to fit in the current paper size. Loads paper from the current paper cassette. 1: Through the image. Loads paper which is the same size as the image. 2: Enlarges or reduces the image to fit in the current paper size. Loads Letter, A4 size paper depending on the image size. 3: Through the image. Loads Letter, A4 size paper depending on the image size. 8: Through the image. Loads paper from the current paper cassette. 9: Through the image. Loads Letter, A4 size paper depending on the image size. 10: Enlarges or reduces the image to fit in the current paper size. Loads Letter, A4 size paper depending on the imagesize.	0
e-MPS error	Y6	0: Does not print the error report and display the error message. 1: Prints the error report. 2: Displays the error message. 3: Prints the error report and displays the error message.	3

*: Ignored in some emulation modes.

(4) Maintenance Commands

This section provides information on how to use the maintenance command and its parameters using examples.

Adjusting the print start timing (alternative command for the maintenance mode U034)

Description

Adjusts the leading edge registration or left edge.

Purpose

Make the adjustment if there is a regular error between the leading edges of the copy image and original.
Make the adjustment if there is a regular error between the left edges of the copy image and original.

Format	!R! KCFG“PFRC”,#1 ,#2 ,#3;	
Parameter	#1	Paper source number 0: MP tray 2-6 : Cassette2-6 100: Duplex (e.g. landscape images short-edge bind) 200: Rotated duplex (e.g. portrait images long-edge bind)
	#2	Edge to adjust 1: Leading edge 2: Left edge
	#3	Adjustable range (-128 to +127) number of dot in 600dpi

Example: Set the leading edge of MP tray to +30 dots

!R! KCFG “PFRC”,0,1,30;EXIT;

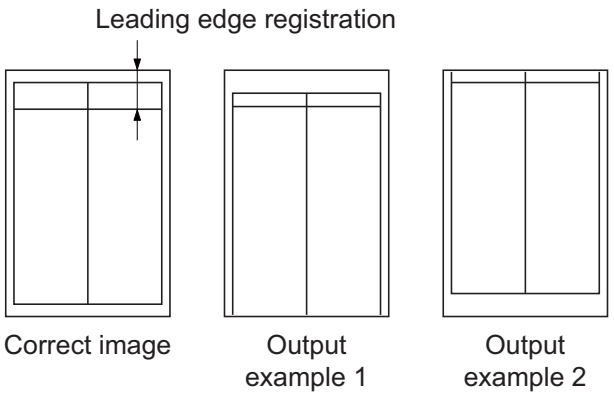

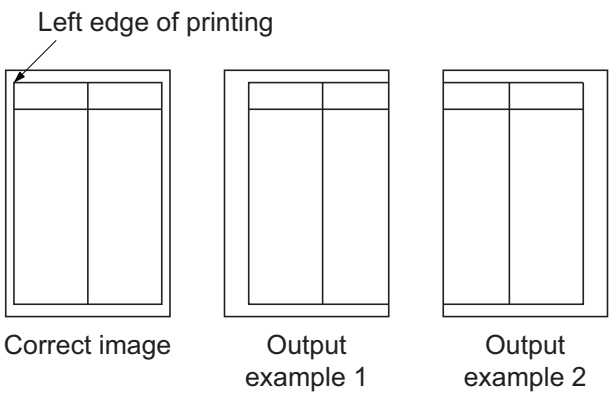

Adjusting the scanner magnification (alternative command for the maintenance mode U065)

Description
Adjusts the magnification of the original scanning.
Purpose
Make the adjustment if the magnification in the main scanning direction is incorrect.
Make the adjustment if the magnification in the auxiliary scanning direction is incorrect.

Format	!R! KCFG “SCAN”,8, #1,#2;EXIT;	
Parameter	#1	1: Y SCAN ZOOM Scanner magnification in the main scanning direction 2: X SCAN ZOOM Scanner magnification in the auxiliary scanning direction
	#2	#1=1: Adjustable range: -32 to 127 (in 0.1% increment) (0: default) #2=2 : Adjustable range: -25 to 25 (in 0.1% increment) (0: default)

Example: Y SCAN ZOOM set to 55, X SCAN ZOOM set to 10
!R! KCFG “SCAN”,8,1,55; KCFG “SCAN”,8,2,10;EXIT;

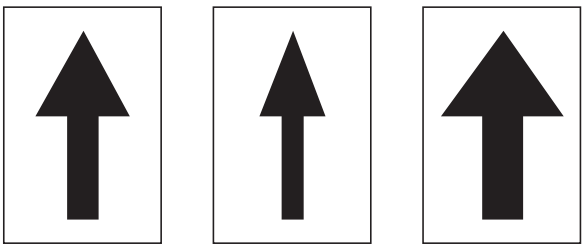

Original　Copy example 1　Copy example 2

Magnified in the main scanning direction

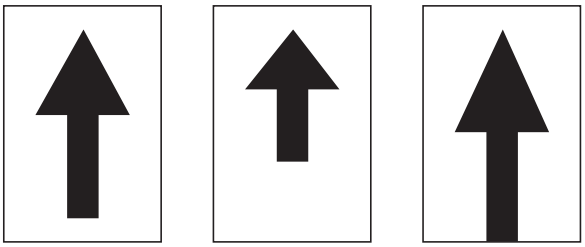

Original　Copy example 1　Copy example 2

Magnified in the auxiliary scanning direction

Adjusting the scanner leading edge registration (alternative command for the maintenance U066)

Description
Adjusts the scanner leading edge registration of the original scanning.
Purpose
Make the adjustment if there is a regular error between the leading edges of the copy image and original.

Format	!R! KCFG “SCAN”,5,#1,#2;;EXIT;	
Parameter	#1	1: Scanner leading edge registration 2: Scanner leading edge registration of rotated scan
	#2	Adjustable range: -45 to 45 (in 0.086mm increment) (0: default)

Example: Scanner leading edge registration set to 10 to increase 0.86mm
!R! KCFG “SCAN”,5,1,”10”;EXIT;

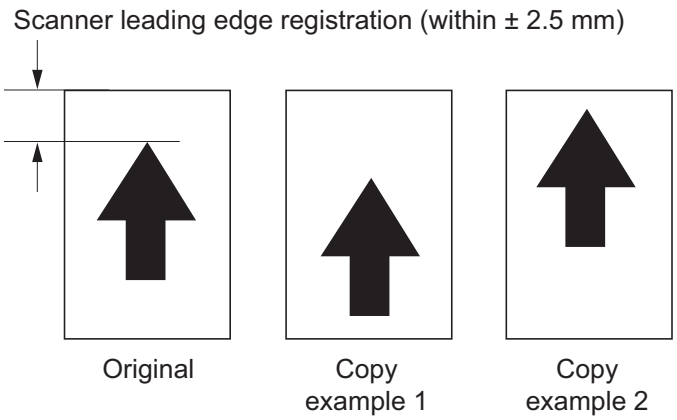

Adjusting the scanner center line (alternative command for the maintenance mode U067)

Description
Adjusts the scanner center line of the original scanning.
Purpose
Make the adjustment if there is a regular error between the center lines of the copy image and original.

Format	!R! KCFG “SCAN”,6, #1;#2;EXIT;	
Parameter	#1	1: Scanner center line 2: Scanner center line of rotated scan
	#2	#1=1: Adjustable range: -70 to 70 (in 0.086mm increment) (0: default) #1=2: Adjustable range: -40 to 40 (in 0.086mm increment) (0: default)

Example: Scanner leading edge registration set to 20 to increase 1.72mm
!R! KCFG “SCAN”,6,1,20;EXIT;

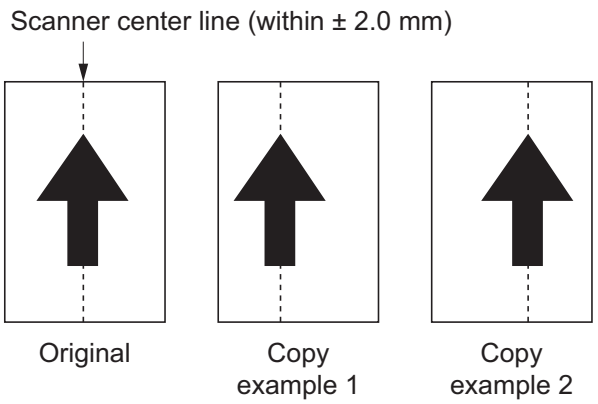

Adjusting the scanning position for originals from the DP (alternative command for the maintenance mode U068)

Description
Adjusts the position for scanning originals from the DP. Performs the test copy at the four scanning positions after adjusting.
Purpose
Used when the image fogging occurs because the scanning position is not proper when the DP is used. Execute KCFG “EESS”,4, 107, 1, “#1”; command to adjust the timing of DP leading edge when the scanning position is changed.

Format	!R! KCFG “SCAN”,9, #1,#2;EXIT;	
Parameter	#1	1: DP READ Starting position adjustment for scanning originals 2: BLACK LINE Scanning position for the test copy originals
	#2	#1=1: Adjustable range: -33 to 33 (in 0.086mm increment) (0: default) #1=2: Adjustable range: 0 to 3 (in 0.22mm increment) (0: default)

Example: DP READ set to 15, BLACK LINE set to 3
!R! KCFG “SCAN”,9,1,15; KCFG “SCAN”,9,2,3;EXIT;

Adjusting the DP magnification (alternative command for the maintenance mode U070)

Description
Adjusts the DP original scanning speed.
Purpose
Make the adjustment if the magnification is incorrect in the auxiliary scanning direction when the DP is used.

Format	!R! KCFG “SCAN”,4, #1;#2;EXIT;	
Parameter	#1	2: CONVEYING SPEED Magnification in the auxiliary scanning direction
	#2	Adjustable range: --25 to 25 (in 0.1% increment) (0: default)

Example: DP scanning magnification set to 20 to increase 2%
!R! KCFG “SCAN”,4,2,20;EXIT;

Leading edge registration

Original Copy example 1 Copy example 2

Adjusting the DP scanning timing (alternative command for the maintenance mode U071)

Description
Adjusts the DP original scanning timing.
Purpose
Make the adjustment if there is a regular error between the leading or trailing edges of the original and the copy image when the DP is used.

Format	!R! KCFG “SCAN”,2,#1,#2;EXIT;	
Parameter	#1	1: FRONT HEAD Leading edge registration (first page) 2: FRONT TAIL Trailing edge registration (first page) 3: BACK HEAD Leading edge registration (second page) 4: BACK TAIL Trailing edge registration (second page) 5: ROTATE Leading edge registration (rotate scan)
	#2	#1=1: Adjustable range: -32 to 32 (in 0.196mm increment) (0: default) #1=2: Adjustable range: -32 to 32 (in 0.196mm increment) (0: default) #1=3: Adjustable range: -45 to 45 (in 0.196mm increment) (0: default) #1=4: Adjustable range: -45 to 45 (in 0.196mm increment) (0: default) #1=5: Adjustable range: -128 to 128 (in 0.196mm increment) (0: default)

Example: FRONT HEAD set to 10, FRONT TAIL set to 15, BACK HEAD set to 10, BACK TAIL 15
!R! KCFG “SCAN”,2,1,10; KCFG “SCAN”,2,2,15; KCFG “SCAN”,2,3,10; KCFG “SCAN”,2,4,15;EXIT;

Leading edge registration

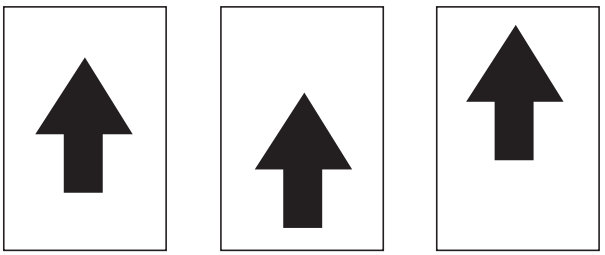

Original | Copy example 1 | Copy example 2

Trailing edge registration

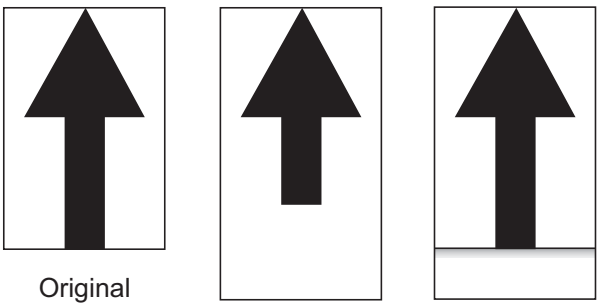

Original | Copy example 1 | Copy example 2

Adjusting the DP center line (alternative command for the maintenance mode U072)

Description
Adjusts the scanning center line for the DP original.
Purpose
Make the adjustment if there is a regular error between the centers of the original and the copy image when the DP is used.

Format	!R! KCFG “SCAN”,3, #1,#2;EXIT;	
Parameter	#1	1: FRONT Center line (first page) 2: BACK Center line (second page) 3: ROTATE Center line (rotated scan)
	#2	Setting range: -39 to 39 (in 0.086mm increment) (initial: 0)

Example: FRONT set to 15, BACK set to 3
!R! KCFG “SCAN”,3,1,15; KCFG “SCAN”,3,2,3;EXIT;

DP center line

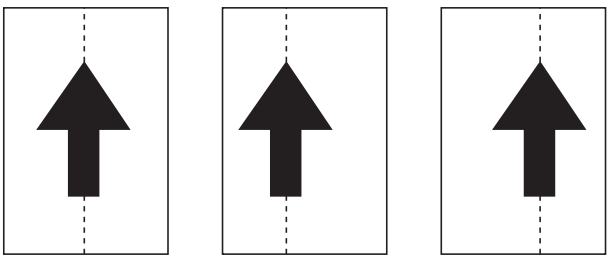

Original | Copy example 1 | Copy example 2

(5) Wiring diagram

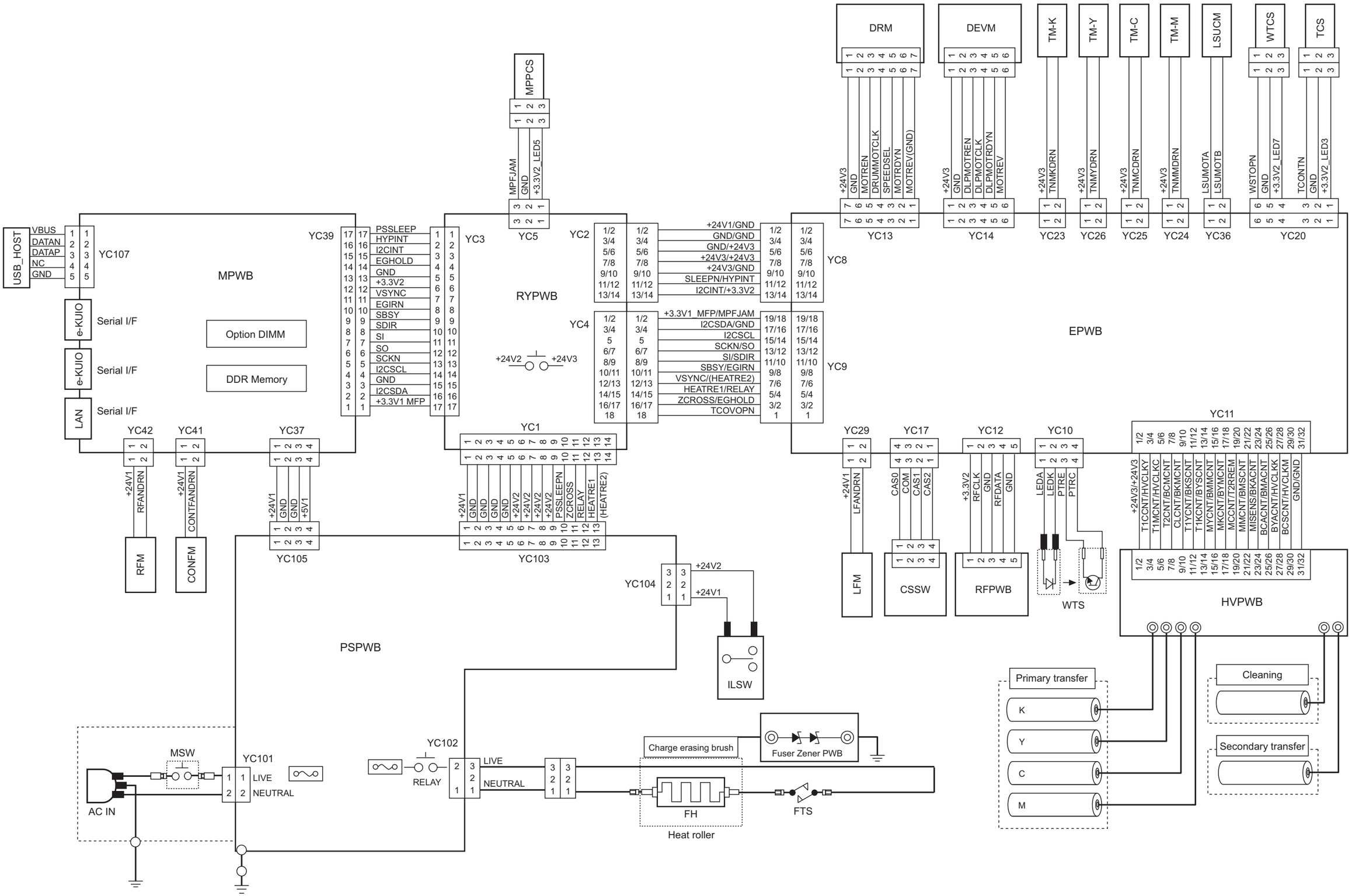

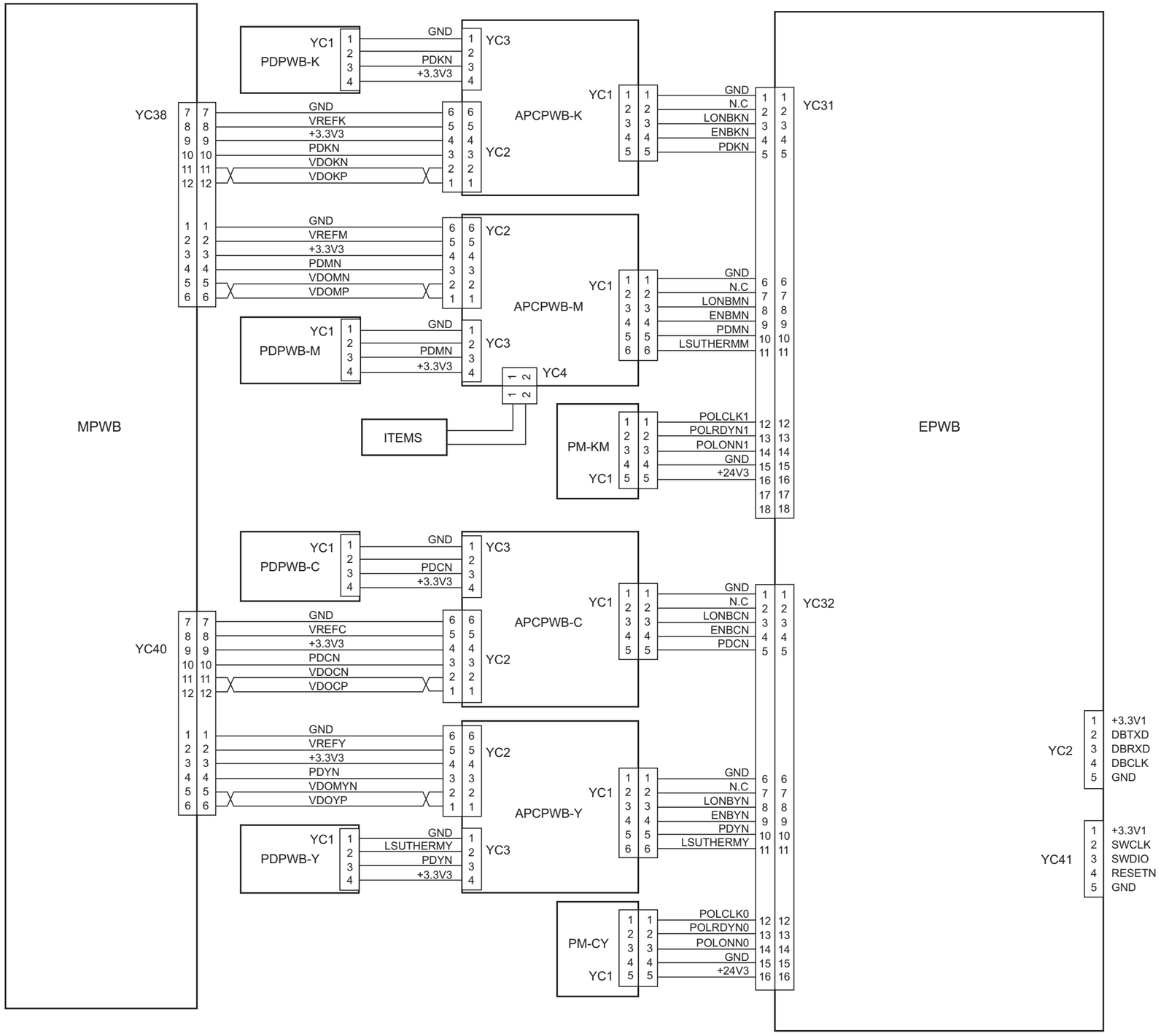
MPWB
EPWB
YC38
YC40
YC31
YC32
YC2
YC41
PDPWB-K
PDPWB-M
PDPWB-C
PDPWB-Y
APCPWB-K
APCPWB-M
APCPWB-C
APCPWB-Y
PM-KM
PM-CY
ITEMS
YC1
YC2
YC3
YC4
GND
PDKN
+3.3V3
VREFK
VDOKN
VDOKP
N.C
LONBKN
ENBKN
VREFM
PDMN
VDOMN
VDOMP
LONBMN
ENBMN
LSUTHERMM
VREFC
PDCN
VDOCN
VDOCP
LONBCN
ENBCN
VREFY
PDYN
VDOMYN
VDOYP
LONBYN
ENBYN
LSUTHERMY
POLCLK1
POLRDYN1
POLONN1
+24V3
POLCLK0
POLRDYN0
POLONN0
+3.3V1
DBTXD
DBRXD
DBCLK
SWCLK
SWDIO
RESETN

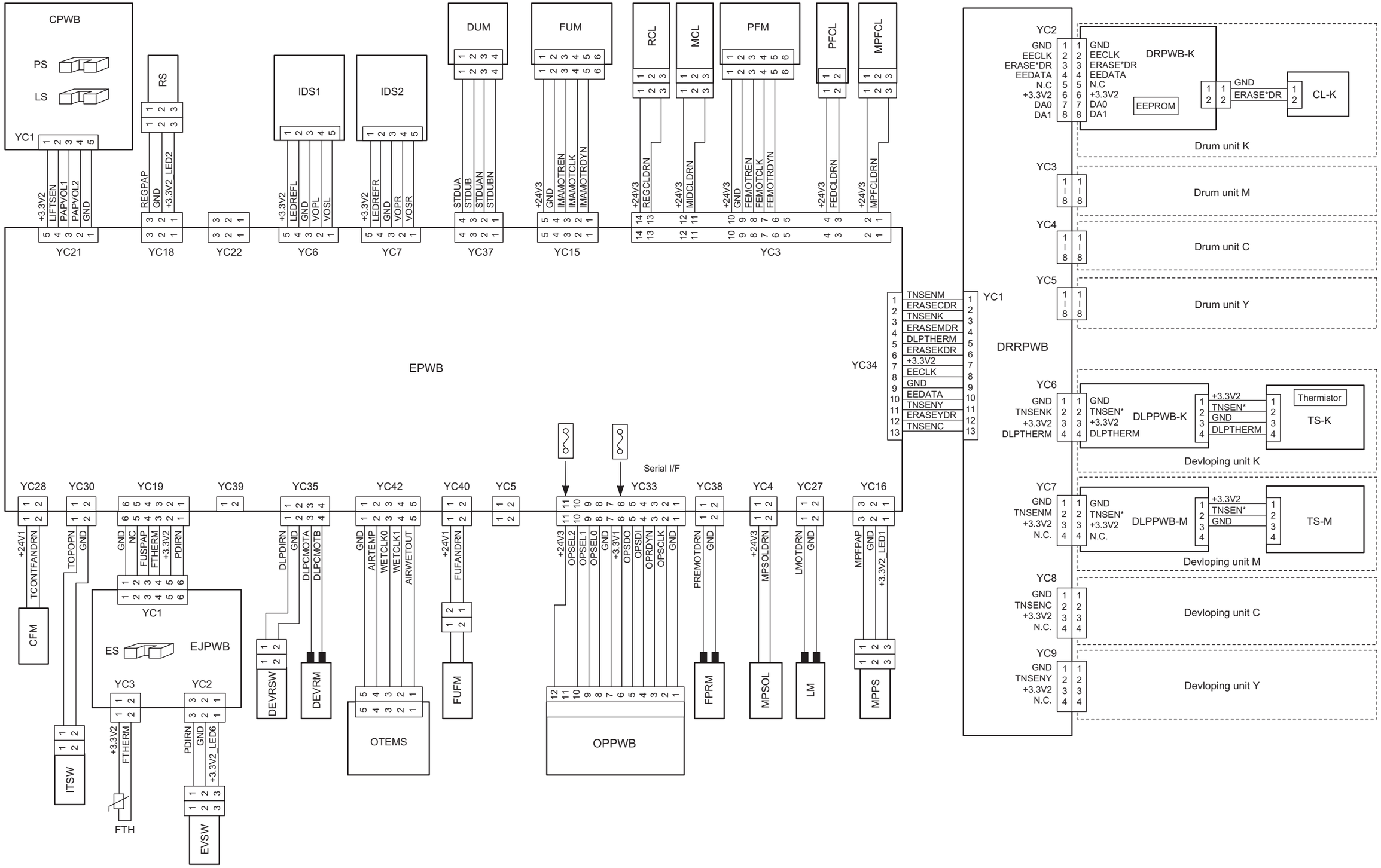
CPWB
PS
LS
YC1
+3.3V2
LIFTSEN
PAPVOL1
PAPVOL2
GND
YC21
RS
REGPAP
GND
+3.3V2_LED2
YC18
YC22
IDS1
+3.3V2
LEDREFL
GND
VOPL
VOSL
YC6
IDS2
+3.3V2
LEDREFR
GND
VOPR
VOSR
YC7
DUM
STDUA
STDUB
STDUAN
STDUBN
YC37
FUM
+24V3
GND
IMAMOTREN
IMAMOTCLK
IMAMOTRDYN
YC15
RCL
+24V3
REGCLDRN
MCL
+24V3
MIDCLDRN
PFM
+24V3
GND
FEMOTREN
FEMOTCLK
FEMOTRDYN
YC3
PFCL
+24V3
FEDCLDRN
MPFCL
+24V3
MPFCLDRN
EPWB
YC34
TNSENM
ERASECDR
TNSENK
ERASEMDR
DLPTHERM
ERASEKDR
+3.3V2
EECLK
GND
EEDATA
TNSENY
ERASEYDR
TNSENC
YC1
DRRPWB
YC2
GND
EECLK
ERASE*DR
EEDATA
N.C
+3.3V2
DA0
DA1
DRPWB-K
EEPROM
GND
ERASE*DR
CL-K
Drum unit K
YC3
Drum unit M
YC4
Drum unit C
YC5
Drum unit Y
YC6
GND
TNSENK
+3.3V2
DLPTHERM
DLPPWB-K
TNSEN*
Thermistor
TS-K
Devloping unit K
YC7
GND
TNSENM
+3.3V2
N.C.
DLPPWB-M
TS-M
Devloping unit M
YC8
GND
TNSENC
+3.3V2
N.C.
Devloping unit C
YC9
GND
TNSENY
+3.3V2
N.C.
Devloping unit Y
Serial I/F
YC28
+24V1
TCONTFANDRN
CFM
YC30
TOPOPN
GND
ITSW
YC19
GND
NC
FUSPAP
FTHERM
+3.3V2
PDIRN
YC1
ES
EJPWB
YC3
+3.3V2
FTHERM
FTH
YC2
PDIRN
GND
+3.3V2_LED6
EVSW
YC39
YC35
DLPDIRN
GND
DLPCMOTA
DLPCMOTB
DEVRSW
DEVRM
YC42
GND
AIRTEMP
WETCLK0
WETCLK1
AIRWETOUT
OTEMS
YC40
+24V1
FUFANDRN
FUFM
YC5
YC33
+24V3
OPSEL2
OPSEL1
OPSEL0
GND
+3.3V1
OPSDO
OPSDI
OPRDYN
OPSCLK
GND
OPPWB
YC38
PREMOTDRN
GND
FPRM
YC4
+24V3
MPSOLDRN
MPSOL
YC27
LMOTDRN
GND
LM
YC16
MPFPAP
GND
+3.3V2_LED1
MPPS

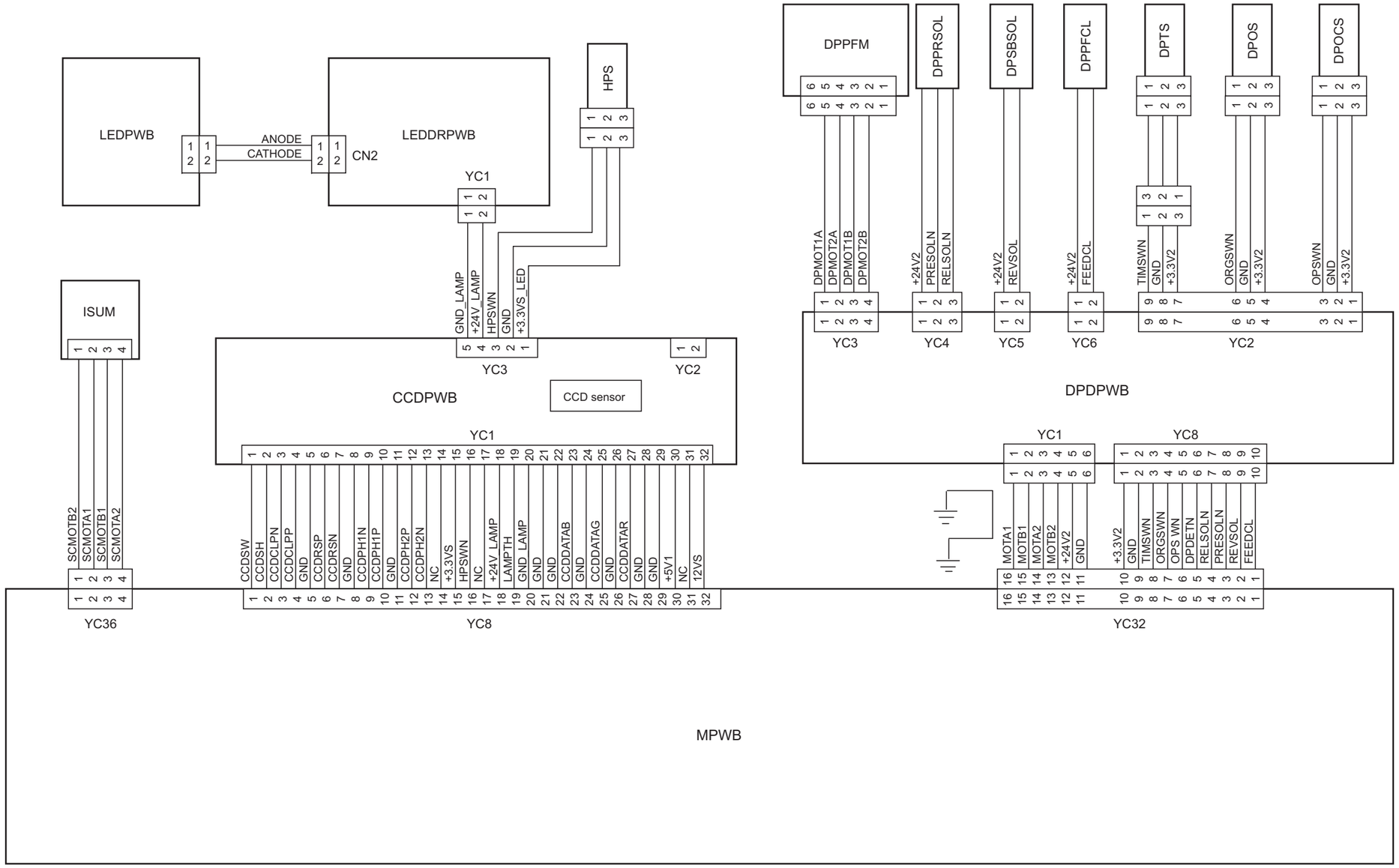
LEDPWB
ANODE
CATHODE
CN2
LEDDRPWB
YC1
HPS
GND_LAMP
+24V_LAMP
HPSWN
GND
+3.3VS_LED
ISUM
YC3
YC2
CCDPWB
CCD sensor
YC1
SCMOTB2
SCMOTA1
SCMOTB1
SCMOTA2
YC36
CCDSW
CCDSH
CCDCLPN
CCDCLPP
GND
CCDRSP
CCDRSN
GND
CCDPH1N
CCDPH1P
GND
CCDPH2P
CCDPH2N
NC
+3.3VS
HPSWN
NC
+24V_LAMP
LAMPTH
GND_LAMP
GND
GND
CCDDATAB
GND
CCDDATAG
GND
CCDDATAR
GND
GND
+5V1
NC
12VS
YC8
DPPFM
DPPRSOL
DPSBSOL
DPPFCL
DPTS
DPOS
DPOCS
DPMOT1A
DPMOT2A
DPMOT1B
DPMOT2B
+24V2
PRESOLN
RELSOLN
+24V2
REVSOL
+24V2
FEEDCL
TIMSWN
GND
+3.3V2
ORGSWN
GND
+3.3V2
OPSWN
GND
+3.3V2
YC3
YC4
YC5
YC6
YC2
DPDPWB
YC1
YC8
MOTA1
MOTB1
MOTA2
MOTB2
+24V2
GND
+3.3V2
GND
TIMSWN
ORGSWN
OPS WN
DPDETN
RELSOLN
PRESOLN
REVSOL
FEEDCL
YC32
MPWB

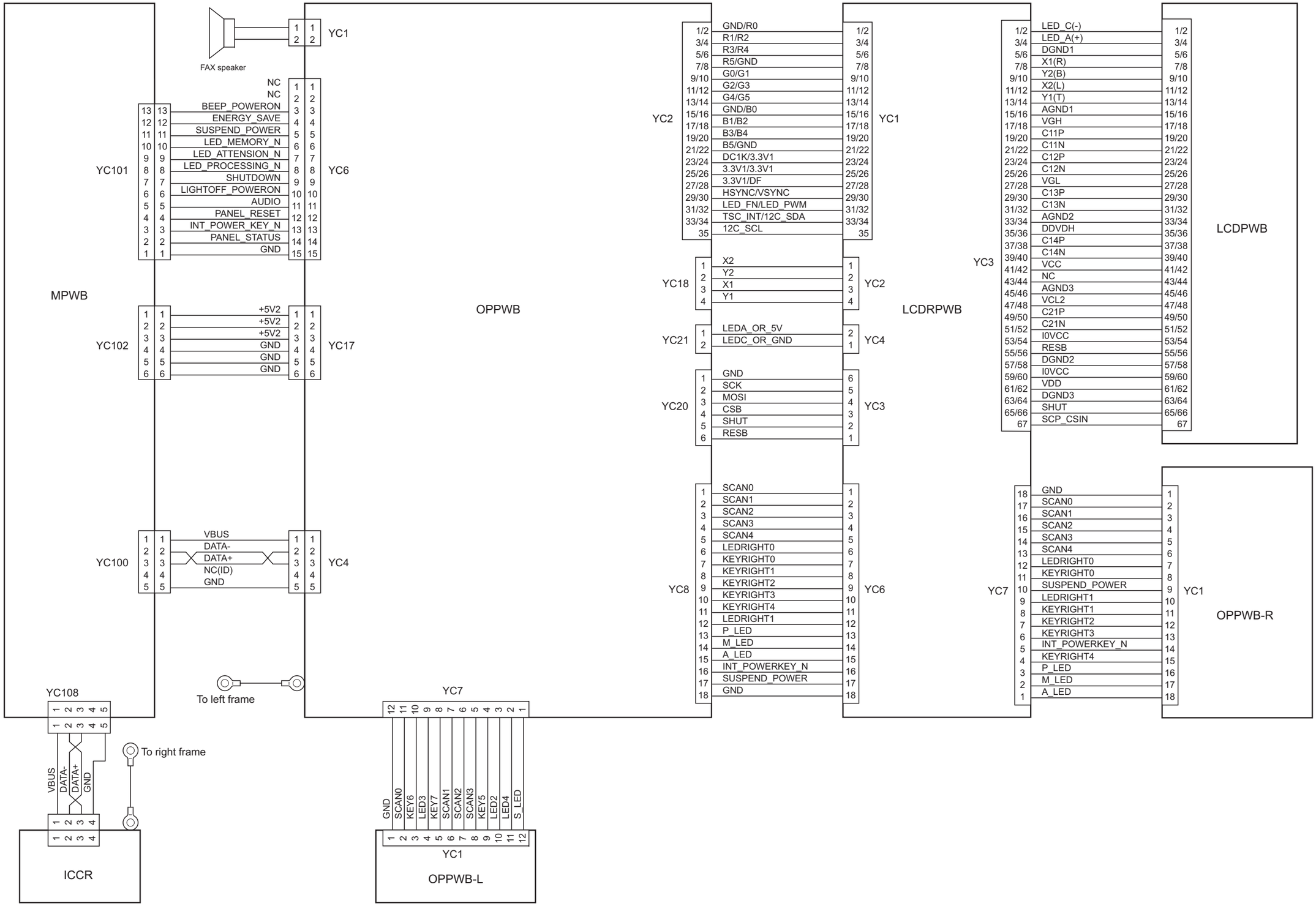
FAX speaker
YC1
MPWB
YC101
YC6
NC
NC
BEEP_POWERON
ENERGY_SAVE
SUSPEND_POWER
LED_MEMORY_N
LED_ATTENSION_N
LED_PROCESSING_N
SHUTDOWN
LIGHTOFF_POWERON
AUDIO
PANEL_RESET
INT_POWER_KEY_N
PANEL_STATUS
GND
YC102
YC17
+5V2
+5V2
+5V2
GND
GND
GND
OPPWB
YC100
YC4
VBUS
DATA-
DATA+
NC(ID)
GND
To left frame
YC108
To right frame
VBUS
DATA-
DATA+
GND
ICCR
YC7
GND
SCAN0
KEY6
LED3
KEY7
SCAN1
SCAN2
SCAN3
KEY5
LED2
LED4
S_LED
YC1
OPPWB-L
YC2
GND/R0
R1/R2
R3/R4
R5/GND
G0/G1
G2/G3
G4/G5
GND/B0
B1/B2
B3/B4
B5/GND
DC1K/3.3V1
3.3V1/3.3V1
3.3V1/DF
HSYNC/VSYNC
LED_FN/LED_PWM
TSC_INT/12C_SDA
12C_SCL
YC1
YC18
X2
Y2
X1
Y1
YC2
YC21
LEDA_OR_5V
LEDC_OR_GND
YC4
YC20
GND
SCK
MOSI
CSB
SHUT
RESB
YC3
YC8
SCAN0
SCAN1
SCAN2
SCAN3
SCAN4
LEDRIGHT0
KEYRIGHT0
KEYRIGHT1
KEYRIGHT2
KEYRIGHT3
KEYRIGHT4
LEDRIGHT1
P_LED
M_LED
A_LED
INT_POWERKEY_N
SUSPEND_POWER
GND
YC6
LCDRPWB
YC3
LED_C(-)
LED_A(+)
DGND1
X1(R)
Y2(B)
X2(L)
Y1(T)
AGND1
VGH
C11P
C11N
C12P
C12N
VGL
C13P
C13N
AGND2
DDVDH
C14P
C14N
VCC
NC
AGND3
VCL2
C21P
C21N
I0VCC
RESB
DGND2
I0VCC
VDD
DGND3
SHUT
SCP_CSIN
LCDPWB
YC7
GND
SCAN0
SCAN1
SCAN2
SCAN3
SCAN4
LEDRIGHT0
KEYRIGHT0
SUSPEND_POWER
LEDRIGHT1
KEYRIGHT1
KEYRIGHT2
KEYRIGHT3
INT_POWERKEY_N
KEYRIGHT4
P_LED
M_LED
A_LED
YC1
OPPWB-R

INSTALLATION GUIDE FOR
Card Authentication Kit(D)

CARD READER HOLDER (D)

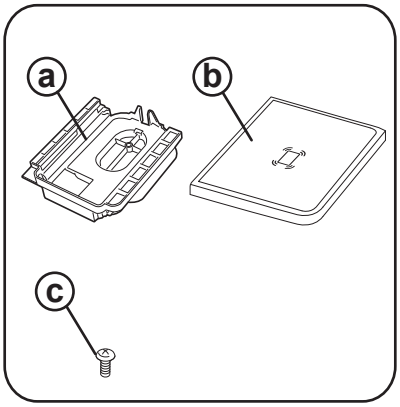

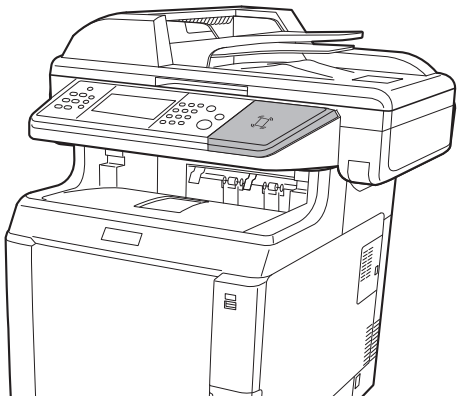

1

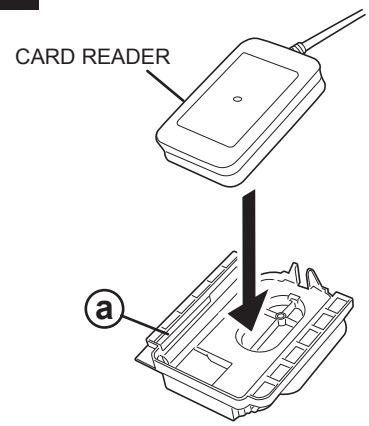

2

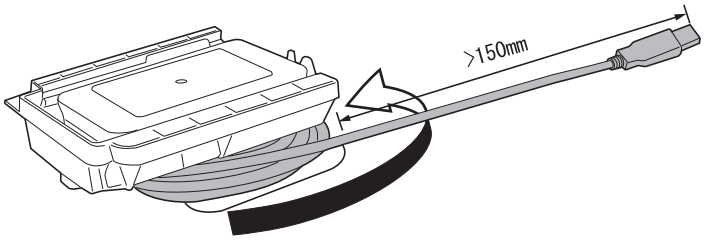

3

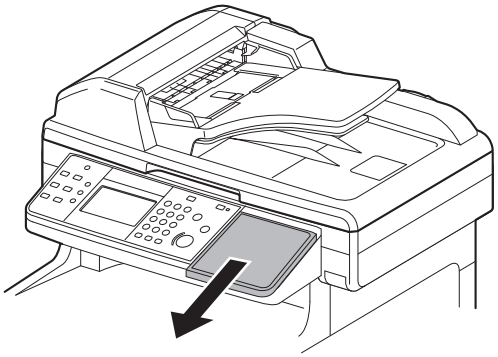

4

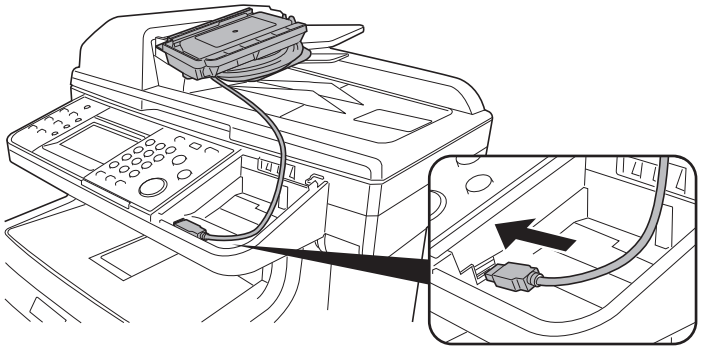

5

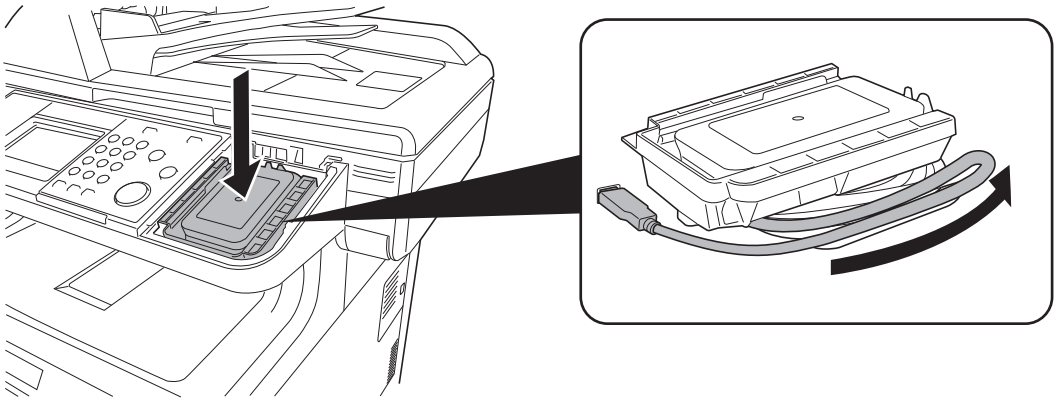

6

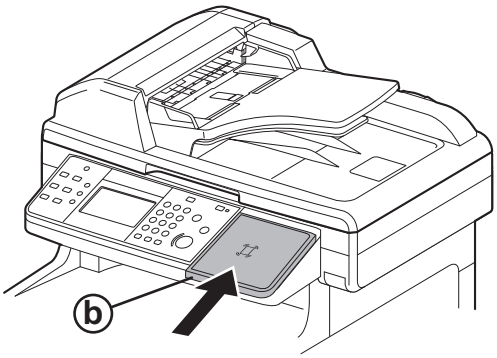

7

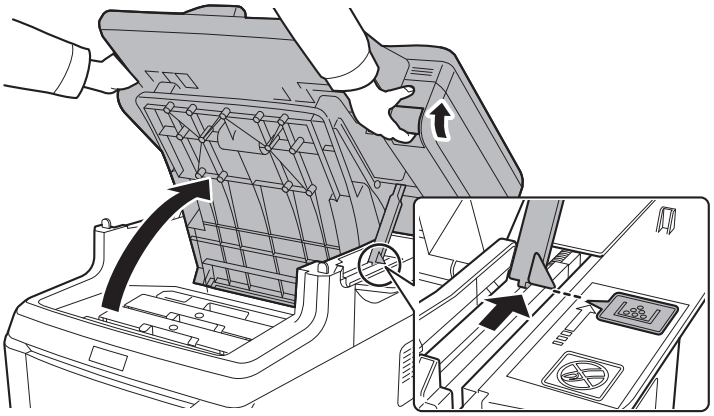

8

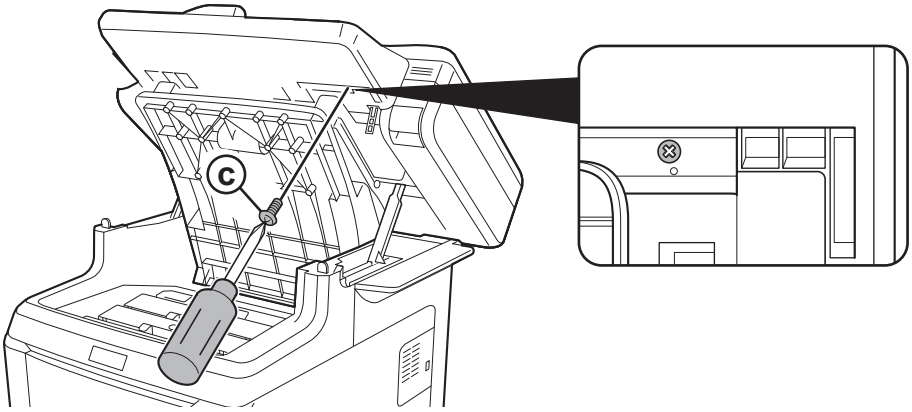

9

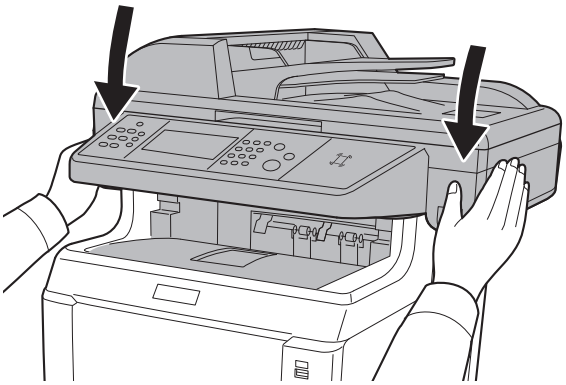

10

(ENG) Refer to the Card Authentication Kit (B) Operation Guide on the bundled Product Library DVD for descriptions of the Card Authentication Kit options and the procedures for using them.

(ES) Consulte la Card Authentication Kit (B) Operation Guide, disponible en el Product Library DVD suministrado, para obtener descripciones de las opciones de Card Authentication Kit y los procedimientos de uso.

(FR) Se reporter au Card Authentication Kit (B) Operation Guide sur le Product Library DVD fourni pour les descriptions des options de Card Authentication Kit et leurs procédures d'utilisation.

(DE) Siehe auch in Card Authentication Kit (B) Operation Guide auf der Product Library DVD für Erklärungen der Card Authentication Kit Optionen und den Gebrauch.

(IT) Vedere Card Authentication Kit (B) Operation Guide sul Product Library DVD fornito per la descrizione delle opzioni Card Authentication Kit e le procedure di utilizzo del kit.

(CN) 有关 Card Authentication Kit 选项的说明以及使用该选项的步骤，请参阅附带的 Product Library DVD 上的Card Authentication Kit (B)操作手册。

(TW) 有關 Card Authentication Kit 選項和使用它們的步驟的說明，請參閱附帶的 Product Library DVD 上的Card Authentication Kit (B)操作手冊。

(KO) Card Authentication Kit 옵션과 사용 과정에 관한 설명은 함께 제공된 Product Library DVD 에 있는 Card Authentication Kit (B) 조작 설 명서를 참조하시기 바랍니다 .

(JP) ICカード認証キットで設定できる内容や操作方法については、付属のProduct Library DVD に収録されているICカード認証キット（B） 使用説明書 を参照してください。

KYOCERA Document Solutions America, Inc.
Headquarters
225 Sand Road,
Fairfield, New Jersey 07004-0008, USA
Phone: +1-973-808-8444
Fax: +1-973-882-6000

Latin America
8240 NW 52nd Terrace Dawson Building, Suite 100
Miami, Florida 33166, USA
Phone: +1-305-421-6640
Fax: +1-305-421-6666

KYOCERA Document Solutions Canada, Ltd.
6120 Kestrel Rd., Mississauga, ON L5T 1S8,
Canada
Phone: +1-905-670-4425
Fax: +1-905-670-8116

KYOCERA Document Solutions
Mexico, S.A. de C.V.
Calle Arquimedes No. 130, 4 Piso, Colonia Polanco
Chapultepec, Delegacion Miguel Hidalgo,
Distrito Federal, C.P. 11560, México
Phone: +52-555-383-2741
Fax: +52-555-383-7804

KYOCERA Document Solutions Brazil, Ltda.
Av.Tambore,1180 Mod.B-09 CEP 06460-000
Tambore-Barueri-SP, Brazil
Phone: +55-11-4195-8496
Fax: +55-11-4195-6167

KYOCERA Document Solutions
Australia Pty. Ltd.
Level 3, 6-10 Talavera Road North Ryde N.S.W, 2113,
Australia
Phone: +61-2-9888-9999
Fax: +61-2-9888-9588

KYOCERA Document Solutions
New Zealand Ltd.
1-3 Parkhead Place, Albany, Auckland 1330,
New Zealand
Phone: +64-9-415-4517
Fax: +64-9-415-4597

KYOCERA Document Solutions Asia Limited
16/F.,Mita Centre, 552-566, Castle Peak Road
Tsuenwan, NT, Hong Kong
Phone: +852-2610-2181
Fax: +852-2610-2063

KYOCERA Document Solutions
(China) Corporation
8F, No. 288 Nanjing Road West, Huangpu District,
Shanghai,200003, China
Phone: +86-21-5301-1777
Fax: +86-21-5302-8300

KYOCERA Document Solutions
(Thailand) Corp., Ltd.
335 Ratchadapisek Road, Bangsue, Bangkok 10800,
Thailand
Phone: +66-2-586-0333
Fax: +66-2-586-0278

KYOCERA Document Solutions
Singapore Pte. Ltd.
12 Tai Seng Street #04-01A,
Luxasia Building, Singapore 534118
Phone: +65-6741-8733
Fax: +65-6748-3788

KYOCERA Document Solutions
Hong Kong Limited
16/F.,Mita Centre, 552-566, Castle Peak Road
Tsuenwan, NT, Hong Kong
Phone: +852-3582-4000
Fax: +852-3185-1399

KYOCERA Document Solutions
Taiwan Corporation
6F., No.37, Sec. 3, Minquan E. Rd.,
Zhongshan Dist., Taipei 104, Taiwan R.O.C.
Phone: +886-2-2507-6709
Fax: +886-2-2507-8432

KYOCERA Document Solutions Korea Co., Ltd.
18F, Kangnam bldg, 1321-1,
Seocho-Dong, Seocho-Gu, Seoul, Korea
Phone: +822-6933-4050
Fax: +822-747-0084

KYOCERA Document Solutions
India Private Limited
First Floor, ORCHID CENTRE
Sector-53, Golf Course Road, Gurgaon 122 002,
India
Phone: +91-0124-4671000
Fax: +91-0124-4671001

KYOCERA Document Solutions Europe B.V.
Bloemlaan 4, 2132 NP Hoofddorp,
The Netherlands
Phone: +31-20-654-0000
Fax: +31-20-653-1256

KYOCERA Document Solutions Nederland B.V.
Beechavenue 25, 1119 RA Schiphol-Rijk,
The Netherlands
Phone: +31-20-5877200
Fax: +31-20-5877260

KYOCERA Document Solutions (U.K.) Limited
Eldon Court, 75-77 London Road,
Reading, Berkshire RG1 5BS,
United Kingdom
Phone: +44-118-931-1500
Fax: +44-118-931-1108

KYOCERA Document Solutions Italia S.p.A.
Via Verdi, 89/91 20063 Cernusco s/N.(MI),
Italy
Phone: +39-02-921791
Fax: +39-02-92179-600

KYOCERA Document Solutions Belgium N.V.
Sint-Martinusweg 199-201 1930 Zaventem,
Belgium
Phone: +32-2-7209270
Fax: +32-2-7208748

KYOCERA Document Solutions France S.A.S.
Espace Technologique de St Aubin
Route de l'Orme 91195 Gif-sur-Yvette CEDEX,
France
Phone: +33-1-69852600
Fax: +33-1-69853409

KYOCERA Document Solutions Espana, S.A.
Edificio Kyocera, Avda. de Manacor No.2,
28290 Las Matas (Madrid), Spain
Phone: +34-91-6318392
Fax: +34-91-6318219

KYOCERA Document Solutions Finland Oy
Atomitie 5C, 00370 Helsinki,
Finland
Phone: +358-9-47805200
Fax: +358-9-47805390

KYOCERA Document Solutions Europe B.V., Amsterdam (NL) Zürich Branch
Hohlstrasse 614, 8048 Zürich,
Switzerland
Phone: +41-44-9084949
Fax: +41-44-9084950

KYOCERA Document Solutions Deutschland GmbH
Otto-Hahn-Strasse 12, 40670 Meerbusch,
Germany
Phone: +49-2159-9180
Fax: +49-2159-918100

KYOCERA Document Solutions Austria GmbH
Eduard-Kittenberger-Gasse 95, 1230 Vienna,
Austria
Phone: +43-1-863380
Fax: +43-1-86338-400

KYOCERA Document Solutions Nordic AB
Esbogatan 16B 164 75 Kista, Sweden
Phone: +46-8-546-550-00
Fax: +46-8-546-550-10

KYOCERA Document Solutions Norge Nuf
Postboks 150 Oppsal, 0619 Oslo,
Norway
Phone: +47-22-62-73-00
Fax: +47-22-62-72-00

KYOCERA Document Solutions Danmark A/S
Ejby Industrivej 60, DK-2600 Glostrup,
Denmark
Phone: +45-70223880
Fax: +45-45765850

KYOCERA Document Solutions Portugal Lda.
Rua do Centro Cultural, 41 (Alvalade) 1700-106 Lisboa,
Portugal
Phone: +351-21-843-6780
Fax: +351-21-849-3312

KYOCERA Document Solutions South Africa (Pty) Ltd.
KYOCERA House, Hertford Office Park,
90 Bekker Road (Cnr. Allandale), Midrand, South Africa.
Phone: +27-11-540-2600
Fax: +27-11-466-3050

KYOCERA Document Solutions Russia LLC
Botanichesky pereulok 5, Moscow, 129090,
Russia
Phone: +7(495)741-0004
Fax: +7(495)741-0018

KYOCERA Document Solutions Middle East
Dubai Internet City, Bldg. 17,
Office 157 P.O. Box 500817, Dubai,
United Arab Emirates
Phone: +971-04-433-0412

KYOCERA Document Solutions Inc.
2-28, 1-chome, Tamatsukuri, Chuo-ku
Osaka 540-8585, Japan
Phone: +81-6-6764-3555
http://www.kyoceradocumentsolutions.com